B-TECH AV MOUNTS

AV AWARDS 2017
MANUFACTURER OF THE YEAR
WINNER

IDEAL FOR POLE MOUNTING

BT7032

LARGE AV ACCESSORY SHELF

500 X 380MM

The BT7032 is a large steel shelf ideal for mounting AV equipment to poles or directly to the wall. Suitable for use with B-Tech's range of flat screen trolleys and floor stands, ceiling mounts and floor-to-ceiling pole mounted solutions. Can also be used on a back-to-back floor stand setup where a shelf is required on each side. Available in a durable Black powder coat finish - ideal for long term use in rental applications.

SPECIFICATION	
Shelf Dimensions	500mm x 380mm
Max load	7.5kg (single pole)
Max load	15kg (double poles)
Colour	Black

FEATURES

- Can be mounted directly to; walls and System X rails/columns, or to B-Tech accessory collars for pole mounting
- Compatible with BT7052 / BT7841 collars for use with Ø50mm poles and BT7260 collars for use with Ø60mm poles (all sold separately)
- Can be mounted on a single or double pole (use 1 collar for single poles, 2 collars for double poles)
- Simple installation

1 POLE 2 POLES

Mount additional shelves as required

Can also be mounted to a single pole using 1 collar

Can also be wall mounted *(Wall fixings not included)*

Shelves can be back-to-back pole mounted with just 1 set of collars

TECHNICAL DRAWINGS

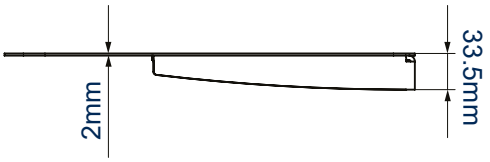

SIDE VIEW

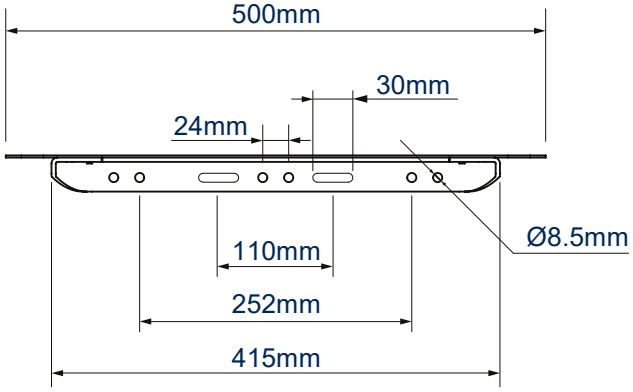

BACK VIEW

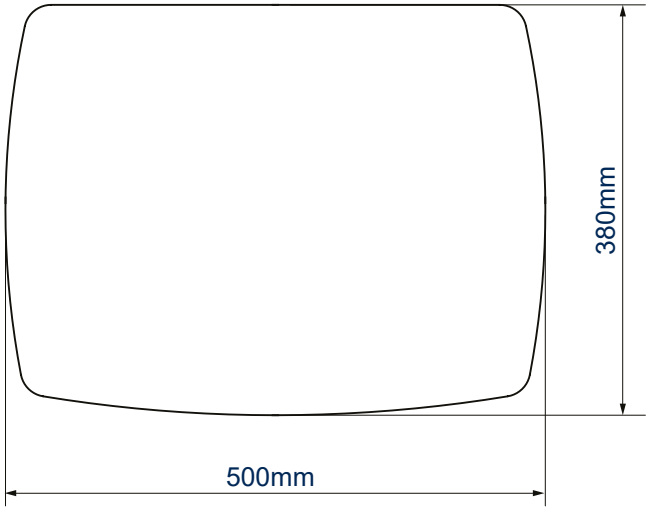

TOP VIEW

PACKING INFORMATION

COLOUR:	ORDER REF:	EAN CODE:	MASTER CARTON QTY:	INNER CARTON QTY:	MASTER CARTON WEIGHT:	MASTER CARTON CUBE:
Black	BT7032/B	5019318759413	4	0	18.65kg	0.054cbm

ACCESSORIES & RELATED PRODUCTS

BT7052

Ø50mm Accessory Collar single attachment

BT7260

Ø60mm Accessory Collar single attachment

BT7033

Accessory Shelf 300x300 ideal for use with B-Tech poles

BT7863

Video Conferencing Camera Shelf ideal for use with B-Tech poles

© 2019 B-Tech International Limited. All rights reserved.
The information in this specification sheet reflects the current technical specifications at the time of print.
We reserve the right to change the technical or physical specifications without prior notice. The B-Tech name and the B-Tech logo are registered trademarks of B-Tech International Ltd.
All other brands and products are trademarks of their respective owners. All B-Tech images and symbols are exclusive property of B-Tech International Ltd.
B-Tech accepts no liability for loss or damage caused by improper installation or mounting on unstable structures. Any reproduction or retransmission or republication of any part of this specification sheet is strictly prohibited, unless prior written permission has been granted by B-Tech International Ltd. E&OE.

SS-BT7032-V2.1-100919