CORAL-PLUS

External Microwave Protection Barrier
Installation Handbook

Edition 1.3

INDICE

1. DESCRIPTION 2

1.1 DESCRIPTION 2

2. INSTALLATION 3

2.1 BARRIER ASSEMBLY 3
2.2 NUMBER OF SECTIONS 4
2.3 GROUND CONDITIONS 5
2.4 PRESENCE OF OBSTACLES 5
2.5 AMPLITUDE OF THE SENSITIVE BEAM 6
2.6 LENGTH OF DEAD ZONES NEAR THE EQUIPMENT 7

3. CONNECTIONS 9

3.1 TERMINAL BLOCKS, CONNECTORS AND CIRCUITS FUNCTIONS 9
3.1.1 Transmitter Circuit 9
3.1.2 Receiver Circuit 11
3.3.3 Power supply and Battery charger circuit 14
3.2 EQUIPMENT CONNECTION TO THE POWER SUPPLY 16
3.2.1 Connection to the Power Supply 16
3.2.2 Connection of stand-by Battery 16
3.3 CONNECTION TO THE CONTROL PANEL 17
3.3.1 Alarm contacts: Alarm, Tamper, Fault 17
3.3.2 Synchronism connection 18
3.3.3 Stand-by connection 18
3.3.4 Test connection 18
3.4 SERIAL LINE RS-485 18
3.4.1 RS - 485 / 232 Network Connection Interface 18
3.4.2 RS -485 Serial Line connections 19
3.4.3 Network Configuration and Signal Repeaters 19
3.5 REMOTE CONNECTION 20

4. ADJUSTMENT AND TESTING 21

4.1 ADJUSTMENT AND TESTING 21
4.1.1 Transmitter Setting up 21
4.1.2 Receiver setting up 22
4.2 ALIGNMENT AND MONITORING WITH SOFTWARE 26

5. MAINTENANCE AND ASSISTANCE 27

5.1 TROUBLESHOOTING 27
5.2 MAINTENANCE KITS 27

6. CHARACTERISTICS 28

6.1 TECHNICAL CHARACTERISTICS 28
6.2 FUNCTIONAL CHARACTERISTICS 29

SCHEDA DI COLLAUDO – TEST SHEET 0

SCHEDA DI COLLAUDO – TEST SHEET 1

1. DESCRIPTION

1.1 Description

CORAL-PLUS is a microwave barrier specifically designed to external volumetric protection.
CORAL-PLUS detects something which is moving between the Transmitter (TX) and the Receiver (RX).
CORAL-PLUS analyze the received signal and processed in order to obtain the maximum performance, therefore less false alarms rate and more security.
Furthermore CORAL-PLUS is very easy to install and maintain.
CORAL-PLUS is available in the following models :

- CORALPLUS100G	Range 100 meters	Colour Green
- CORALPLUS220G	Range 220 meters	Colour Green
- CORALPLUS100A	Range 100 meters	Colour Aluminium
- CORALPLUS220A	Range 220 meters	Colour Aluminium

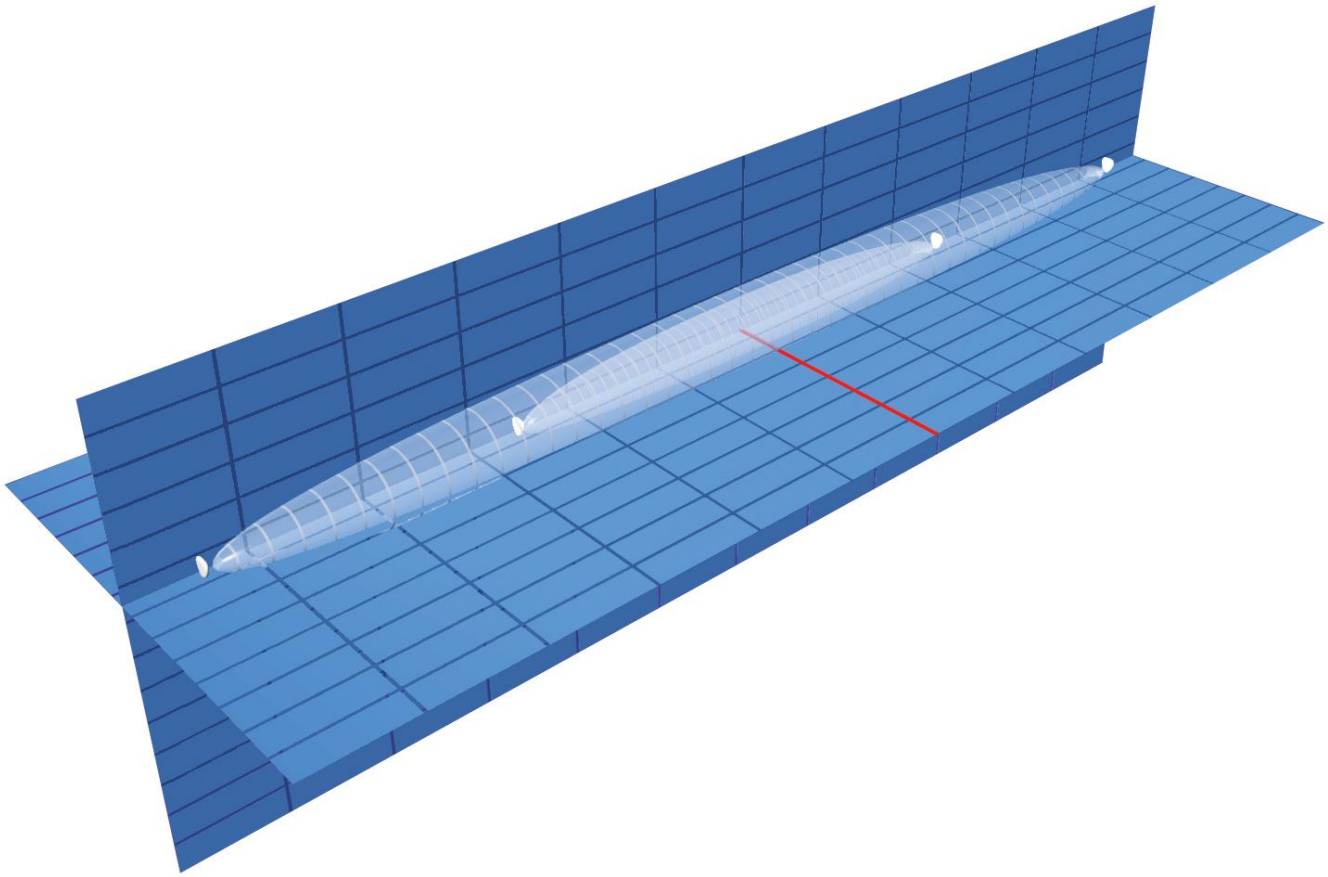

2. INSTALLATION

2.1 Barrier assembly

To install the CORAL-PLUS barrier fix the Tx head on one pole, and the Rx head on another pole.
Is available (Optional) the “CORAL-SP” which is specifically designed to be used to install CORAL-PLUS.
If you prefer to use another pole, it has to have the characteristics showed in the following picture.

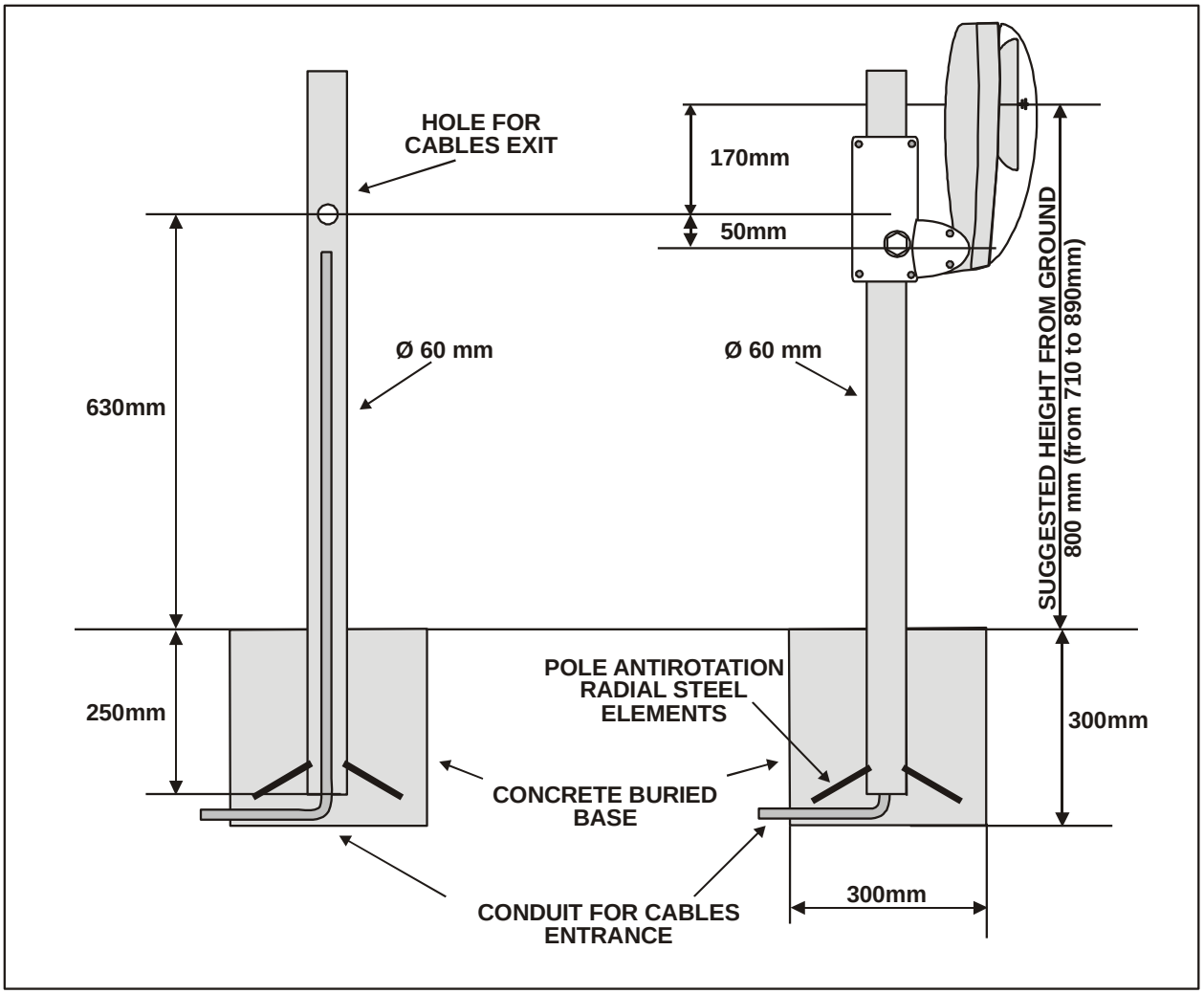

2.2 Number of Sections

Before the installation, we have to think about how to install the system.
Therefore, remember that it's always preferable to install a even number of section. This because in a close perimeter which is made of an odd number of sections it's present one corner where there are one Transmitter and one Receiver which can produce an interference between themselves.

In figure 1a the angle between the two heads Tx and Rx is correct, but the two heads are too closed one to the other, and the Transmitter in front to this Rx head is too far, so the spurious signal coming from the close transmitter may be high compared to the its own. In fig 1c the angle between the two heads Tx and Rx is more than 90° and this is wrong. In addition these two heads are too close one to the other.

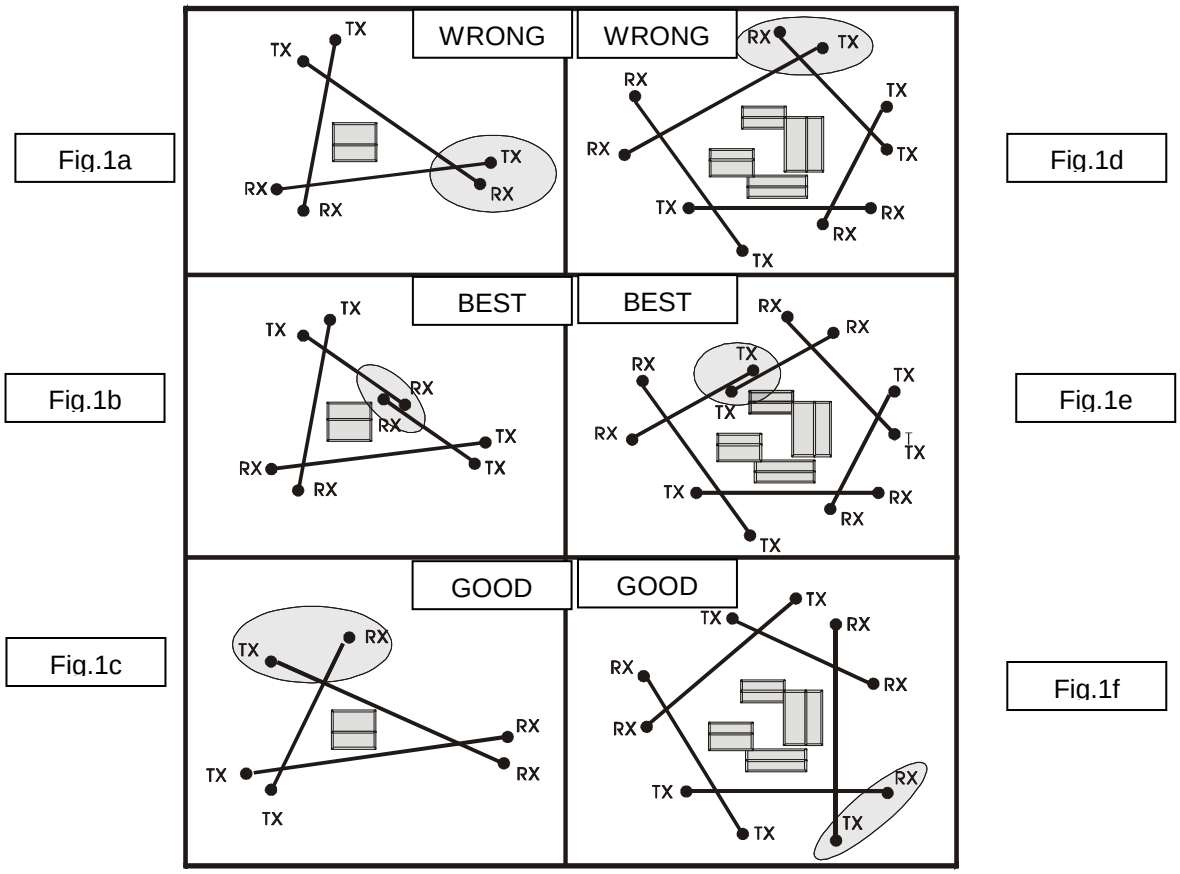

Figure 1

2.3 Ground conditions

It's advise against to install the equipment along sections where are present high grass (more than 10 cm), ponds, longitudinal stream, and all those types of grounds which its conformation is rapidly changeable. Use "20cm Special Antenna" for installation on concrete, asphalt and all those reflective pavements with distance longer than 50m.

2.4 Presence of Obstacles

The **fences**, are generally **metallic** therefore highly reflective. For this reason some precautions are suggested:

- Make sure that the fence has been properly **fixed** in order to avoid that the wind moves it;
- when it's possible the microwave beam shouldn't installed in **parallel** to a metallic fence;
- if it's necessary to install the microwave barrier between two fences, make sure that the distance between those two isn't less then 5 mt. In addition, in this case avoid to use the barriers for more than half their maximum range.
- when there's a metallic fences behind the barrier's head, it can be a problem due to the fact that it could generate some false alarm rates
- **Trees, hedges, bushes in general**, need **very great attention** if they're near or within the protection beams. These obstacles vary in size and position, in fact they grow and they can be moved by the wind. So, it's absolutely advise against tolerate the presence of the cited obstacles within the protection sections.

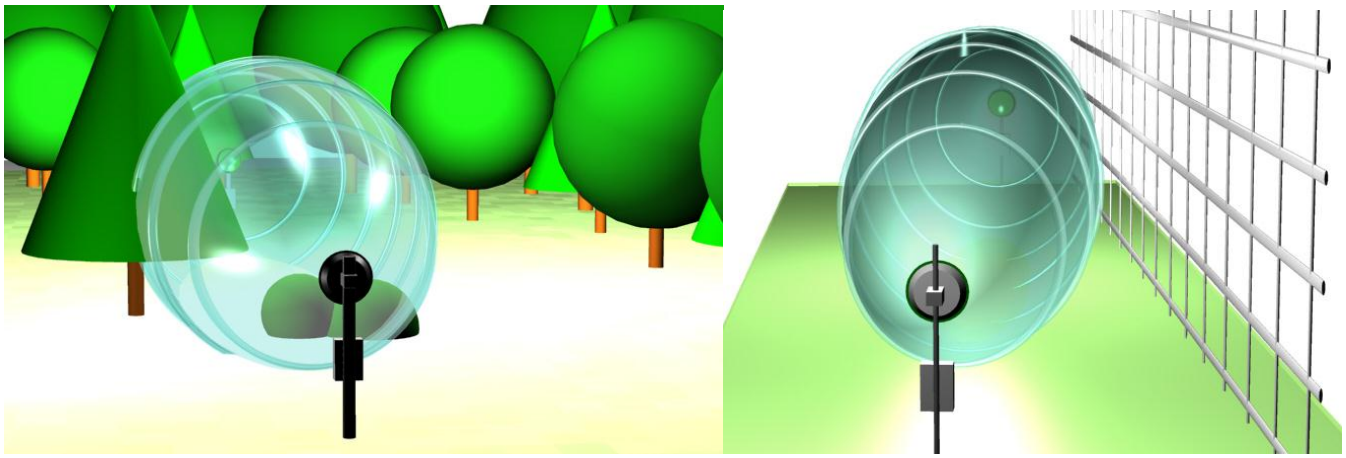

Figure 2

It's possible to tolerate the presence of these elements near the protection sections only if their growth is limited through routine maintenance, and if their movement is stopped using containment barriers. Various **Obstacles** might be present along the protection sections. For them there is the necessity to make the same considerations and take the same precautions adopted for the above cases. This cause of **Dead zones** not protected and **Hypersensitive zones** which cause false alarm.

2.5 Amplitude of the Sensitive Beam

The amplitude of the **Sensitive Beam depends** on the distance between the transmitter and the receiver, on the **antenna type** and on the **sensitivity** adjustment set. The pictures below show the dimension half-range of the sensitive beam section (based on the length of the section) in case of maximum and minimum sensitivity (see next picture).

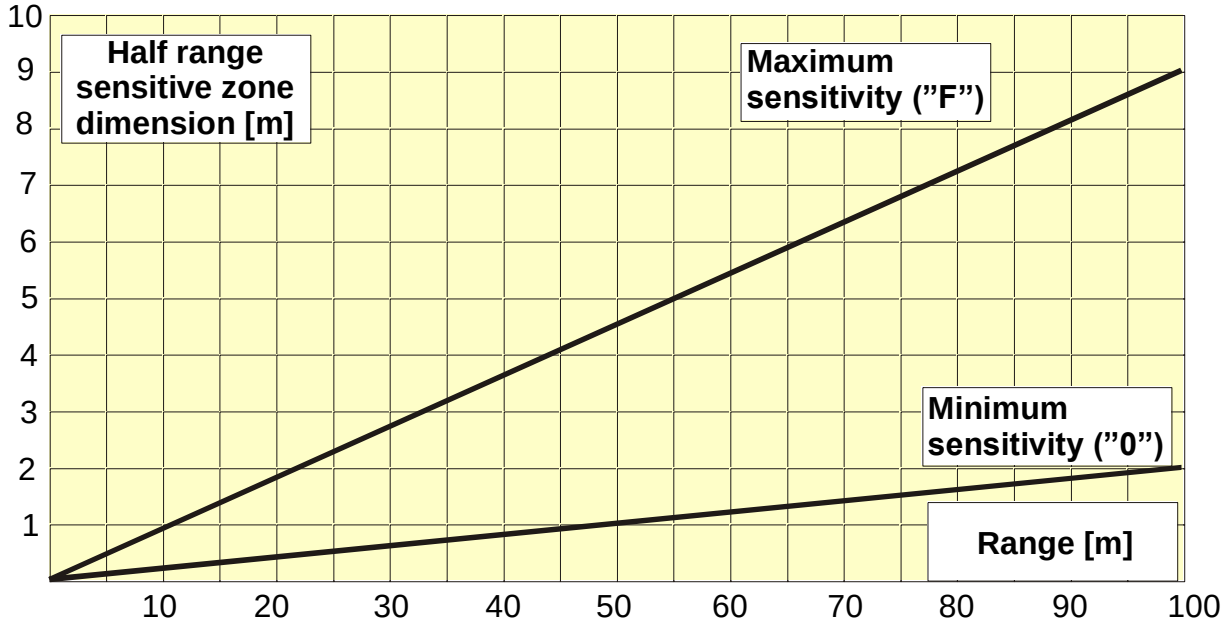

Figure 3 ***Horizontal*** *plane Half range sensitive zone dimension for CORAL-PLUS 100 (free space)*

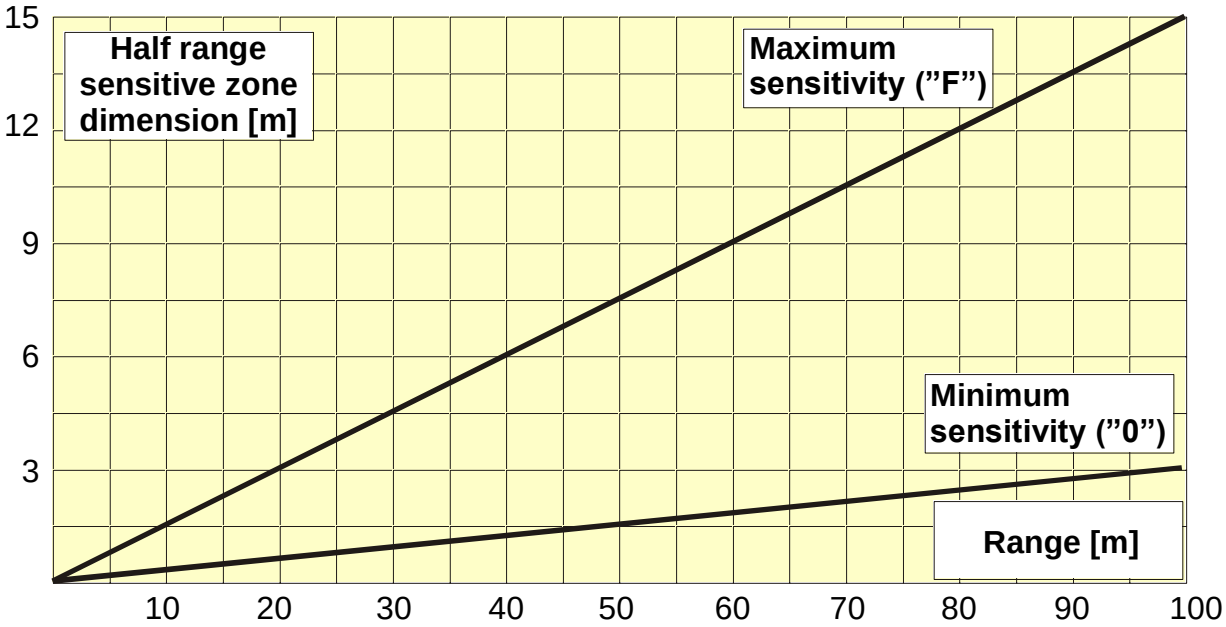

Figure 3a ***Vertical*** *plane Half range sensitive zone dimension for CORAL 100 (free space)*

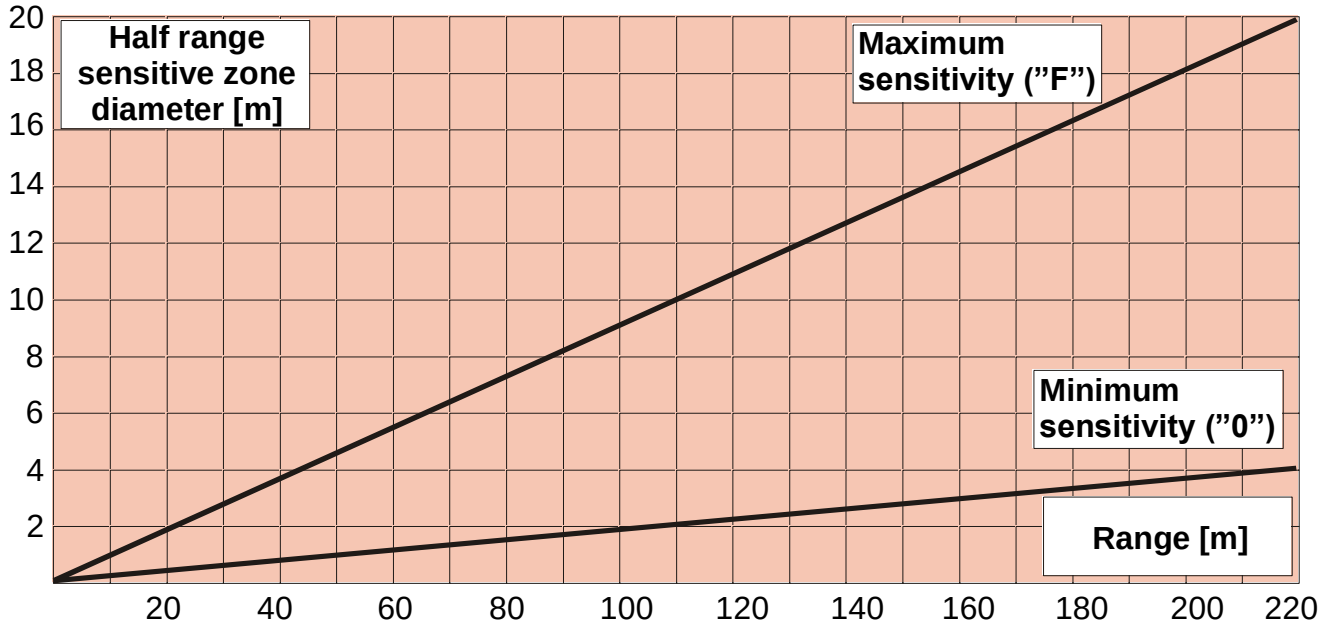

Figure 4 Half range sensitive zone diameter for CORAL-PLUS 220 (free space)

2.6 Length of Dead Zones near the equipment

The length of the **Dead Zones** near the equipment is based on the distance of the equipment from ground, on the sensitivity set on the receiver and on the type of antenna used.

The suggested height, for standard installations, should be about 80 cm. (85/90cm for 100m barriers) from the ground and the centre of the equipment. With medium sensitivity setting, the suggested crossing overlap is at least 5 m., for CORAL-PLUS-220 model and at least 3,5 m. for CORAL-PLUS100 model.

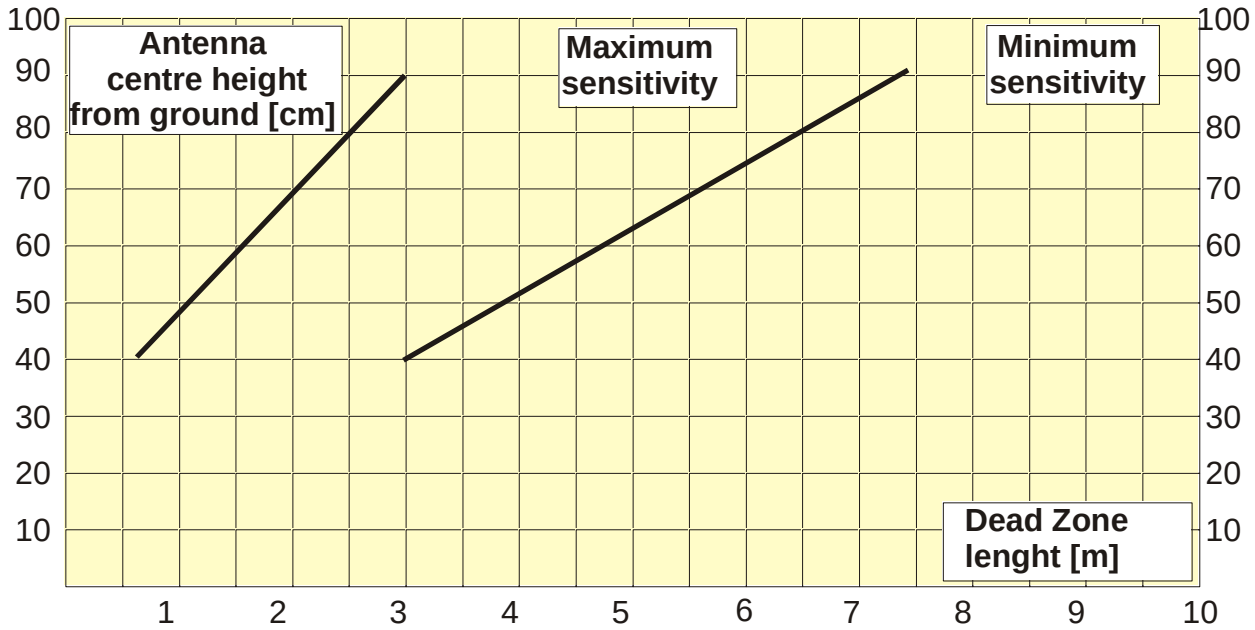

Figure 5 CORAL-PLUS 100 Dead zone length near the equipment versus antenna centre height from ground.

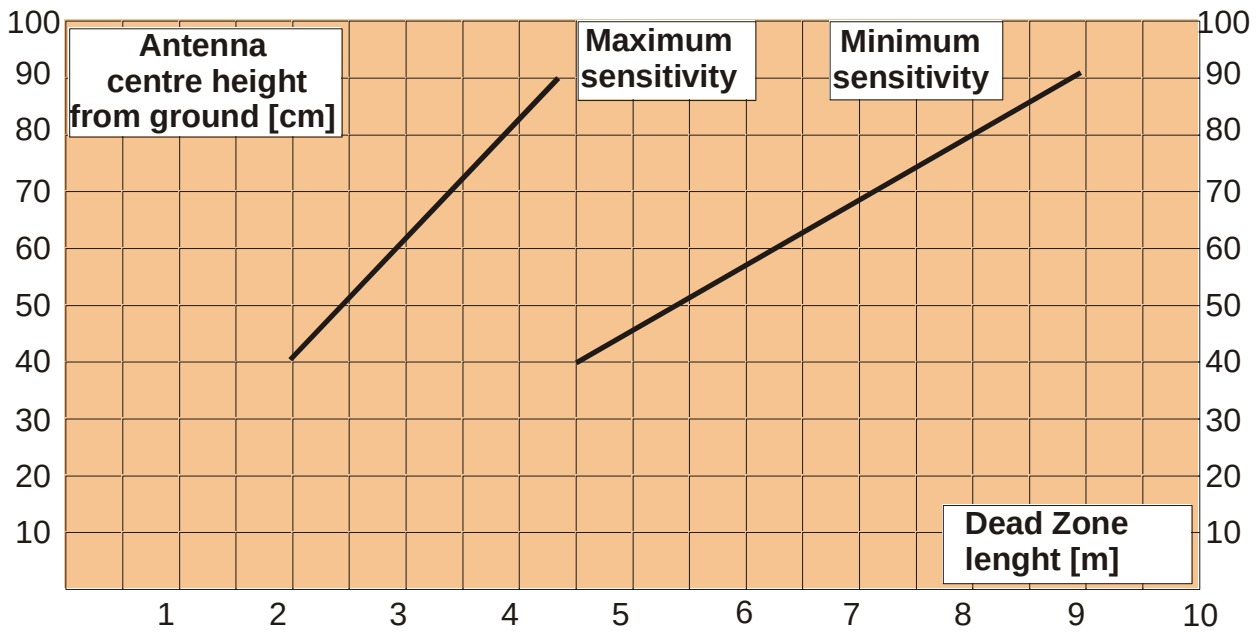

Figure 6 CORAL-PLUS 220: Dead zone length near the equipment versus antenna centre height from ground.

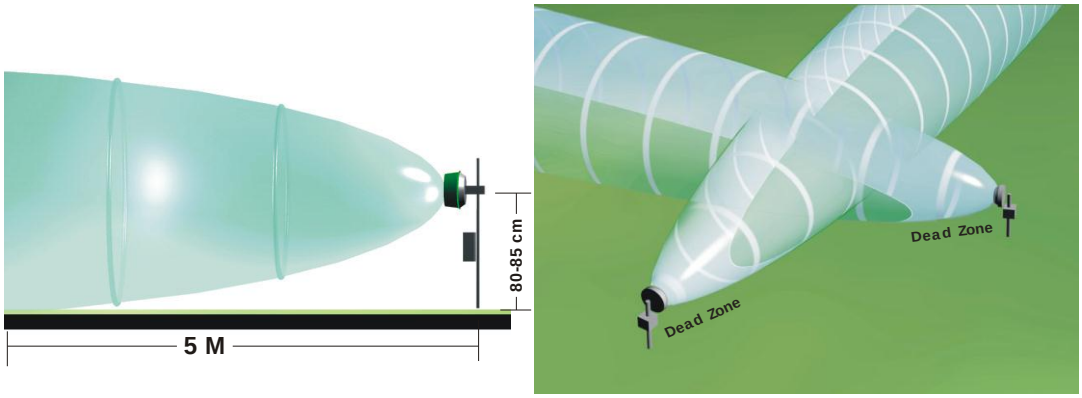

3. CONNECTIONS

3.1 Terminal Blocks, Connectors and Circuits Functions

3.1.1 Transmitter Circuit

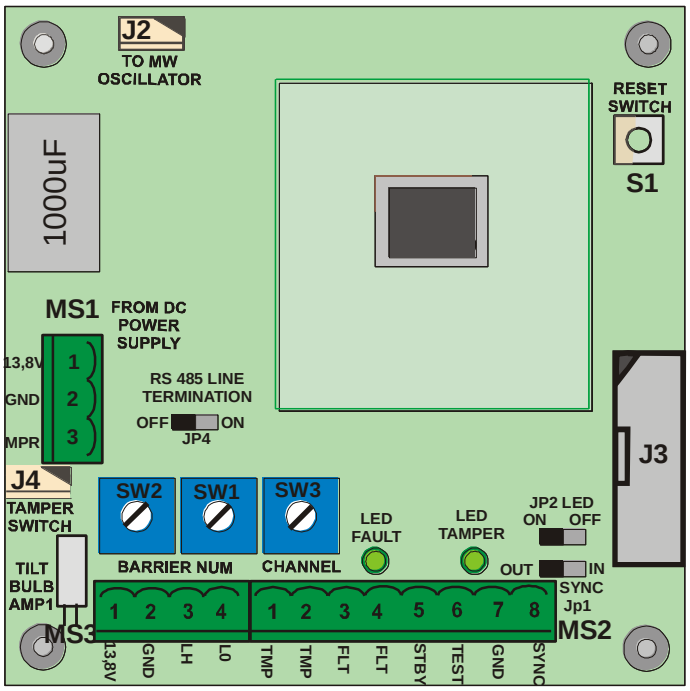

Figure 8 *Layout of connectors, jumpers, LEDs and presetting in transmitter board*

The following tables show the connector pin functions present on the CORAL-PLUS Transmitter PCB

TRANSMITTER TERMINAL BLOCK MS1		
Term	**Symbol**	**Function**
1	13,8V	Positive Supply Voltage (+13,8V⎓)
2	GND	Negative Supply Voltage (0V⎓)
3	MPR	Main Presence Voltage (+14,6V⎓ = main and Power Supply OK)

TRANSMITTER TERMINAL BLOCK MS2		
Term	**Symbol**	**Function**
1	TMP	Tamper relay contact + Tilt Bulb Switch AMP1 (NC)
2	TMP	Tamper relay contact + Tilt Bulb Switch AMP1 (NC)
3	FLT	Fault relay contact (NC)
4	FLT	Fault relay contact (NC)
5	STBY	Input for Stand-By command (Norm. Open from GND)
6	TEST	Input for Test command (Norm. Open from GND)
7	GND	Auxiliary Ground connection
8	SYNC	Output (Input) Synchronism signal, to (From) Tx Slave (Master)

TRANSMITTER TERMINAL BLOCK MS3		
Term.	**Symbol**	**Funzione**
1	13,8V	Supply Voltage for 485/232 converter (+13,8V⎓)
2	GND	Ground for RS 485/232 converter and data reference (0V⎓)
3	LH	High Data Line (+ RS 485)
4	LO	Low Data Line (-RS 485)

TRANSMITTER CONNECTOR J2		
Pin	**Symbol**	**Function**
1	GND	Ground to MW oscillator
2	DRO	Connection for MW oscillator
3	GND	Ground to MW oscillator

TRANSMITTER CONNECTOR J3		
Pin	**Symbol**	**Function**
1-2-3-5-8-9-10-11-14-15	N.C.	Not connected
4	GND	Ground
6	+13,8 V	Supply Voltage (13,8 V⎓)
7	GND	Ground
12	+5 V	Internal Supply Voltage (5 V⎓)
13	OSC	Measure for working Oscillator (+4V⎓ = OK, 0 or 8V⎓ = NOT OK)
16	+8 V	Internal Supply Voltage (8 V⎓)

TRANSMITTER CONNECTOR J4		
Pin	**Symbol**	**Function**
1	GND	Ground to Tamper Switch
2	ING	Tamper Switch Input
3	GND	Ground to Tamper Switch

TRANSMITTER SWITCHES SW3 SW2 SW1	
Symbol	**Function**
SW3	Hexadecimal switch for modulation channel selection from 0 to F
SW2	Barrier Number selector (tens column)
SW1	Barrier Number selector (units column)

TRANSMITTER LEDS		
Symbol	**Indication**	**Default**
D7	Fault	**ON**
D3	Tamper	**ON**

TRANSMITTER JUMPERS		
Symbol	**Function**	**Default**
Jp1	OUT = Internal Modulation (Tx is “Master” Sync is outgoing) IN = External Modulation (Tx is “Slave” Sync is ingoing)	**OUT**
Jp2	Enable or disable the Fault and Tamper Leds	**ON**
Jp4	RS485 Line termination - Jp4 (left) line not terminated	**OFF**

3.1.2 Receiver Circuit

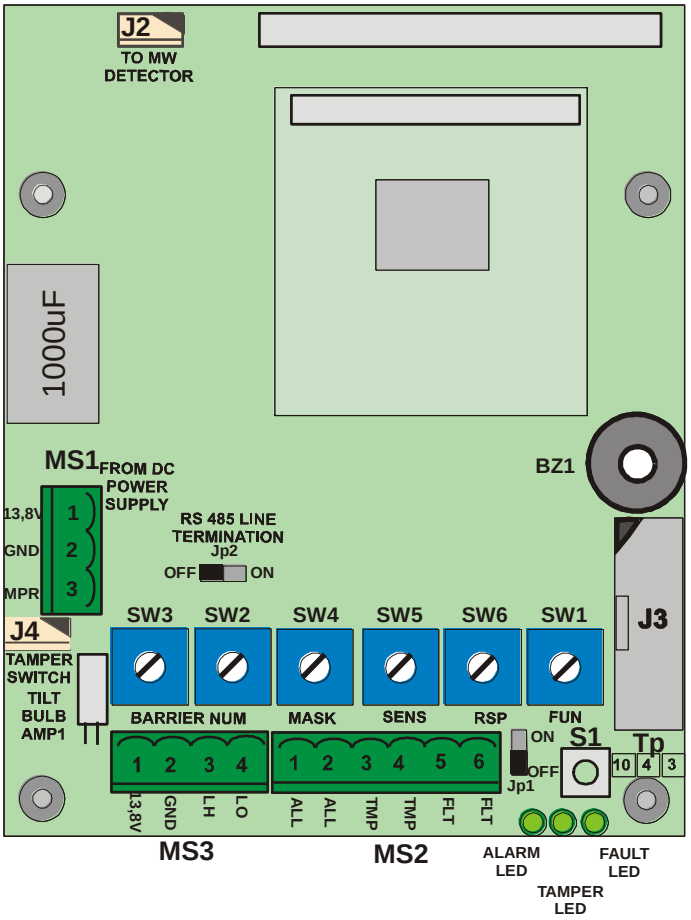

Figure 9 *Layout of connectors, jumpers, LED and presetting in receiver board*

The following tables shows the connector pin functions present on CORAL-PLUS Receiver board.

RECEIVER TERMINAL BLOCK MS1		
Tem	**Symbol**	**Function**
1	13,8V	Positive Supply Voltage (+13,8V⎓)
2	GND	Negative Supply Voltage (0V⎓)
3	MPR	Main Presence Voltage (+14,6V⎓ = main and Power Supply OK)

RECEIVER TERMINAL BLOCK MS2		
Term	**Symbol**	**Function**
1	ALL	Alarm relay contact (N.C.)
2	ALL	Alarm relay contact (N.C.)
3	TMP	Tamper relay contact + Tilt Bulb Switch AMP1 (NC)
4	TMP	Tamper relay contact + Tilt Bulb Switch AMP1 (NC)
5	FLT	Fault relay contact (N.C.)
6	FLT	Fault relay contact (N.C.)

RECEIVER TERMINAL BLOCK MS3		
Term.	**Symbol**	**Funzione**
1	13,8V	Supply Voltage for 485/232 converter (+13,8V⎓)
2	GND	Ground for RS 485/232 converter and data reference (0V⎓)
3	LH	High Data Line (+ RS 485)
4	LO	Low Data Line (-RS 485)

RECEIVER CONNECTOR J2		
Pin	**Symbol**	**Function**
1	GND	Ground to MW detector
2	DET	Connection for MW Detector
3	GND	Ground to MW detector

RECEIVER CONNECTOR J3		
Pin	**Symbol**	**Function**
1-2-3-5-8-10-11-13-15-16	N.C.	Not connected
4	GND	Ground
6	+13,8 V	Supply Voltage (13,8 V⎓)
7	GND	Ground
9	0,2V	Received signal 200 mVpp
12	+5 V	Internal Supply Voltage (5 V⎓)
14	VRAG	“Automatic Gain Regulator” Voltage

RECEIVER CONNECTOR J4		
Term	**Symbol**	**Function**
1	GND	Ground to Tamper Switch
2	ING	Tamper Switch Input
3	GND	Ground to Tamper Switch

RECEIVER JUMPER		
Symbol	**Function**	**Default**
Jp1	Enable or disable the Alarm, Tamper and Fault Leds (D6, D5, D4)	**ON**
Jp2	RS485 Line termination – Jp2 (left) line not terminated	**OFF**

RECEIVER LEDS		
Symbol	**Indication**	**Default**
D4	Fault + alignment	**ON**
D5	Tamper + alignment	**ON**
D6	Alarm + alignment	**ON**

RECEIVER PUSH BUTTON FOR FUNCTIONS ACTIVATION	
Symbol	**Function**
S1	- Acquisition of received signal during the alignment (SW1 in position 1) - Acquisition of: Channel Number, Value of Received Field and Indication of Alignment Quality (SW1 in position 2) - Indication of the alignment quality (SW1 in position 3)

RECEIVER TEST POINTS	
Symbol	**Function**
Tp 3	Measure of field signal 200 mVpp (Oscilloscope)
Tp 4	Measure of the Automatic Gain Regulator Voltage Value (V RAG)
Tp 10	Ground reference for instruments

RECEIVER FUNCTION SELECTION SWITCH	
Symbol	**Function**
SW1	Position 1 = Barrier Alignment Position 2 = Acquisition of: Channel Number, Value of Received Field and indication of Alignment Quality Position 3 = Acquisition and section parameters (thresholds Read/write) Position 4 = Normal Functionality, Walk-Test and indication of alignment quality

RECEIVER SWITCHES TO SET THE WORKING-PARAMETERS	
Symbol	**Function**
SW4	Regulation of the anti-masking control sensitivity (“0” = Low sensitivity, “F” = High sensitivity, Default “8”)
SW5	Barrier Sensitivity regulation (“0” = Low sensitivity, F High Sensitivity, Default “7”)
SW6	Type of answer of the barrier intrusion (Default = “5”) **0 = Very High Decrease of Sensitivity** Use this for targets that are very big *or very close to the Tx and Rx heads.* (Big birds, cats that can jump near the heads ect.) **1 =High Decrease of Sensitivity** T*argets that are big or very close to the* Tx and Rx *heads* **2 = Medium Decrease of Sensibility** Targets that are big *or very near to the heads* Tx and Rx **3 = Decrease of Sensitivity** Targets that are big or very near to the heads Tx and Rx **4 = Decrease of Sensitivity** *Equal for every target* **5 = Standard** **6 = Increase of Sensitivity** *Equal for every target* **7 = Increase of Sensitivity** *for small targets* (crawling/rolling intruder) **8 = Medium increase of sensitivity** *for small targets* **9 = High increase of Sensitivity** *for small targets*

RECEIVER NUMBER OF BARRIER SWITCHES SW2 SW3		
N°	**Symbol**	**Function**
2	SW2	Barrier Number selector (units column)
3	SW3	Barrier Number selector (tens column)

3.3.3 Power supply and Battery charger circuit

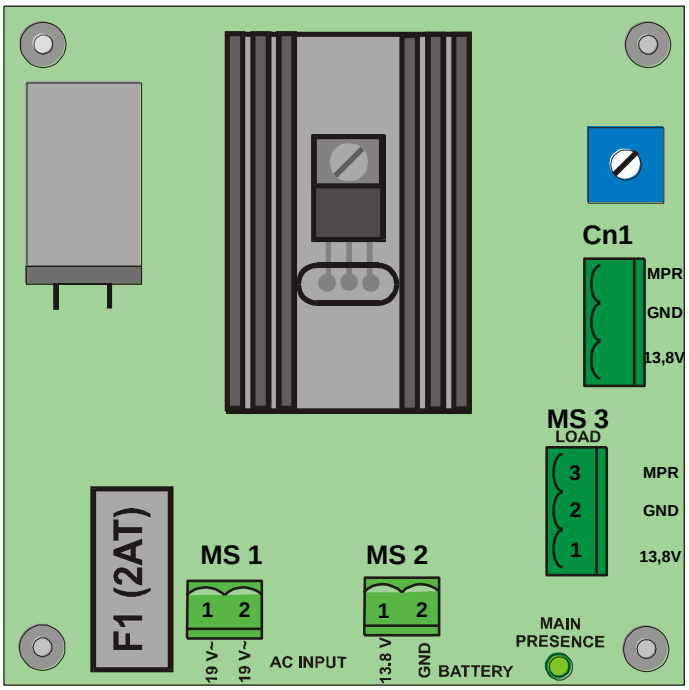

POWER SUPPLY TERMINAL BLOCK MS1		
Term	**Symbol**	**Function**
1	19 V~	Main AC Supply Voltage (19-24 V~) or (24V⎓)
2	19 V~	Main AC Supply Voltage (19-24 V~) or (24V⎓)

POWER SUPPLY TERMINAL BLOCK MS2		
Term	**Symbol**	**Function**
1	13,8V	Positive Supply Voltage for Battery Charge (+13,8V⎓) limitation 600 mA ⎓
2	GND	Negative Supply Voltage for Battery Charge

POWER SUPPLY TERMINAL BLOCK MS3		
Term	**Symbol**	**Function**
1	13,8V	Positive Supply Voltage (+13,8V⎓)
2	GND	Negative Supply Voltage (0V⎓)
3	MPR	Main Presence Voltage (+14,6V⎓ = main and Power Supply OK)

POWER SUPPLY CONNECTOR CN1		
Term	**Symbol**	**Function**
1	13,8V	Positive Supply Voltage (+13,8V⎓)
2	GND	Negative Supply Voltage (0V⎓)
3	MPR	Main Presence Voltage (+14,6V⎓ = main and Power Supply OK)

POWER SUPPLY LED		
Symbol	**Function**	**Default**
D2	Main presence indication	**ON**

POWER SUPPLY FUSE	
Symbol	**Function**
F1	Main Supply Voltage Protection fuse (T2A-250V)

3.2 Equipment Connection to the Power Supply

Even when the equipment is DC powered (13,8 V⎓), it still operates properly, but it is advisable to power it by Alternating Current (19 or 24 V~) or (24 V⎓) using the power supply and battery charger included.

3.2.1 Connection to the Power Supply

The connection from the equipment to the **optional transformer** must be as short as possible (less then 4 meters), and the section of the conductor must not be less than 1.5 mm². The connection from the transformer to the 230 V~ mains, must have the same characteristics. The power supply cables connecting transformer with equipment, must be electrically shielded and the shield must be connected to earth tap. The low voltage conductors (19 or 24 V~) have to be connected to the terminal block MS1 (1 and 2) of the power supply and battery charger circuit. The protection fuse F1 is 2 A (T2A) slow-blow type.
The transformer characteristics are following:

- primary voltage: 230 V~
- secondary voltage 19 V~
- minimum power 30 VA

Note: use only safety transformers (example Certified EN 60950)
Make sure to connect the body of the transformer to hearth tap.
The transformer connection to the main (230 V~), must be carried out through one circuit breaker having the following characteristics:

- bipolar with minimum distance between contacts equal to 3 mm
- provided in the fix part of cabling
- easily accessible

It is possible to use the toroidal safety transformer mod. TRTOR installed inside the Tx e Rx CORAL-PLUS heads.
However laws and standards concerning installations of devices permanently connected to the main (230 V~), must be strictly respected (in Italy Law 46/90 and standard CEI 64-8).

3.2.2 Connection of stand-by Battery

Into each equipment head there's the housing for an optional rechargeable back-up lead Battery 12 V⎓ 2 Ah (optional). The battery is charged by the internal power supply, through the red and black fastons and wires connected to the terminal block MS2 of the power supply an battery charger circuit (both Rx and Tx heads). The protection against overload and/or battery polarity inversion, is provided by an auto resettable fuse (300 mA) The back-up lead battery allows more than 24 hours of perfect working to the barrier head (TX or RX), in case of mains supply missing.
A fault condition is activated if continuously for 3 hours the mains supply is missed.

Note: package, of the optional standby battery, must have a flame class equal or better than HB (UL 94 Standard).

3.3 Connection to the Control Panel

Electrically shielded cables must be used to make the connections to the Control Panel.

3.3.1 Alarm contacts: Alarm, Tamper, Fault

On receiver PCB are present 3 static relays with dry contacts normally closed. By means of these contacts it's possible to communicate to the control panel the following conditions:

- **ALARM, TAMPER, FAULT**

On transmitter PCB are present 2 static relays with dry contacts normally closed. By means of these contacts it's possible to communicate to the control panel the following conditions:

- **TAMPER, FAULT**

On the transmitter PCB are provided also 3 inputs to activate the following functions:

- **Test**
- **Stand-by**
- **Synchronism (Input or Output)**

The output contacts for alarm, tamper and fault, both on transmitter and receiver, are made by Static Relays with maximum current of 100 mA.

Remark: in closed condition the resistance of these contacts is about **40 ohm**.
The connections to control panel must be made by means of shielded cables.
The relays are activated for the following reasons:

- ALARM RELAY

1- Pre-alarm on receiver (Remark1)
2- Intrusion alarm on receiver
3- Receiver masking condition alarm
4- Successful result of test procedure operation
5- Insufficient received signal (V RAG >6,99V)
6- Channel alarm.

- TAMPER RELAYS

1- Cover removing (radome) (TX and RX)
2- Tilt Bulb position (TX and RX)

- FAULT RELAYS

1- Battery voltage low (< +11V⎓)
2- Battery voltage high (> +14.8V⎓)
3- RF (radio frequency) or LF (low frequency) Oscillator fault on Transmitter
4- Power supply circuit fault or mains supply voltage missing (more then 3 hours)

Remark 1: if the intrusion signal, after overcoming the start of analysis threshold (Walk Test buzzer sounds intermittent), stays for about 30 sec in this condition, the alarm output is activate (the contact become opened).

3.3.2 Synchronism connection

For the Synchronism operation between two Transmitters, it is necessary to interconnect the terminals 8 **"SYNC"** and 7 **"GND"** of terminal block MS2 of both Transmitters.
It is also necessary to select one Transmitter as "**Master**" and the other as "**Slave**", by means of jumper Jp1.

- Jp1 = **"IN"** position, the terminal 8 of MS2 is the **input** for an external synchronism signal, so the Transmitter is "**Slave**".
- Jp1 = **"OUT"** position, the terminal 8 of MS2 is the **output** for the synchronism signal internally produced, so the Transmitter is "**Master**"

Remark: the cable connecting the two transmitters, must be shielded with the shield connected to the hearth tap, and must be as short as possible (not more than 10 meters). If cables longer than 10 meters are required, it is necessary to use the synchronism repetition circuit mod. SYNC 01.

3.3.3 Stand-by connection

For the Stand-by function activation, it is necessary connect to ground the terminal 5 "STBY" of MS2 terminal block of the transmitter circuit.

Remark: the Stand-by command, inhibits the MW emission of the Tx head, then an alarm is activated on the receiver head.

3.3.4 Test connection

The Test function will be activated connecting to ground the terminal **6 "TEST"** of the terminal block MS2 on Transmitter circuit. If the test procedure is successful done, the alarm relays on Receiver circuit will be activated later 10 second.

Remark: for high risk protections it's necessary to perform a Periodic Test of the detectors. In this way the control panel will be able to detect elusion actions against detectors.

3.4 Serial Line RS-485

3.4.1 RS - 485 / 232 Network Connection Interface

A standard RS 485 serial interface is provided on both transmitter and receiver heads of the CORAL-PLUS barrier. The communication parameters are the following:

Mode:	Asynchronous - Half-Duplex
Baud rate:	9600 b/s
Character length:	8bit
Parity control:	No Parity
Stop bit:	1

3.4.2 RS -485 Serial Line connections

The way of laying down the cable must be “multidrop” type (BUS), and the derivations for units connection as short as possible. Using the Repeater/Regenerator and interface multipliers (BUS REP) it is possible to make others cabling configurations like:full Star type, mixed, Star and BUS type. Connect to the terminal 4 “LO” (“RS 485 –“ negative data line); to the terminal 3 “LH” (“RS 485+” positive data line) and to the terminal 2 “GND” (data ground line) of the terminal block MS3 for the Receiver PCB and MS5 for the Transmitter PCB. To connect a PC on serial line it is necessary to use a serial line converter RS 485/232, to connect a PC with a USB port you mast use the USB-RS485 conversion included in WAVE TEST sw.

	Cable for connection of all the heads Rx and Tx To the maintenance P. C. with WAVE TEST Software			
Connector interface MS4(Tx), MS5(Rx	**Connector 25 pin**	**Terminal block converter USB-RS485**		
N°	**N°**		**Symbol**	**Function**
1	**12**		+13,8	Power supply (13,8 VDC) per for 485/232 converter
2	**9**	**1**	GND	Ground data and power supply for 485/232 converter
3	**10**	**2**	LH 485	High Line for RS 485
4	**11**	**3**	LO 485	Low Line for RS 485

3.4.3 Network Configuration and Signal Repeaters

The interconnection cable concerning barrier management through a remote P.C. must be suitable for a RS485 serial data line, i.e., it must be a **low capacity cable with 3 twisted and shielded leads (70 pF/mt**.) for example “Belden 9842”.The limit distances of the RS 485 connection is 1200 meters. For longer distances use one or more interface Regenerators (BUS REP), see figure 11. The way of laying down the cable must be of BUS type, and the derivations for units connection as short as possible. It is possible to lay down the cable in different manner: full stellar; mixed, stellar and BUS type, using Repeaters/Regenerators and interface multipliers (BUS REP), see figure 11. The total number of units (Tx and Rx) that can be connected to the line are 32, for an higher number of units, it is necessary the use of one or more line regenerators RS 485, this is true also in case of cable length lower than 1200 metres. Shield connection continuity must be guaranteed to properly protect the cited line from induced noise. To this concern the shield will have to be GROUNDED only in one point, i.e., near the power supply unit. The power supply voltage to the RS485 / RS 232 interface converter must be delivered by a local power supply unit, which will have to be placed near the converter proper

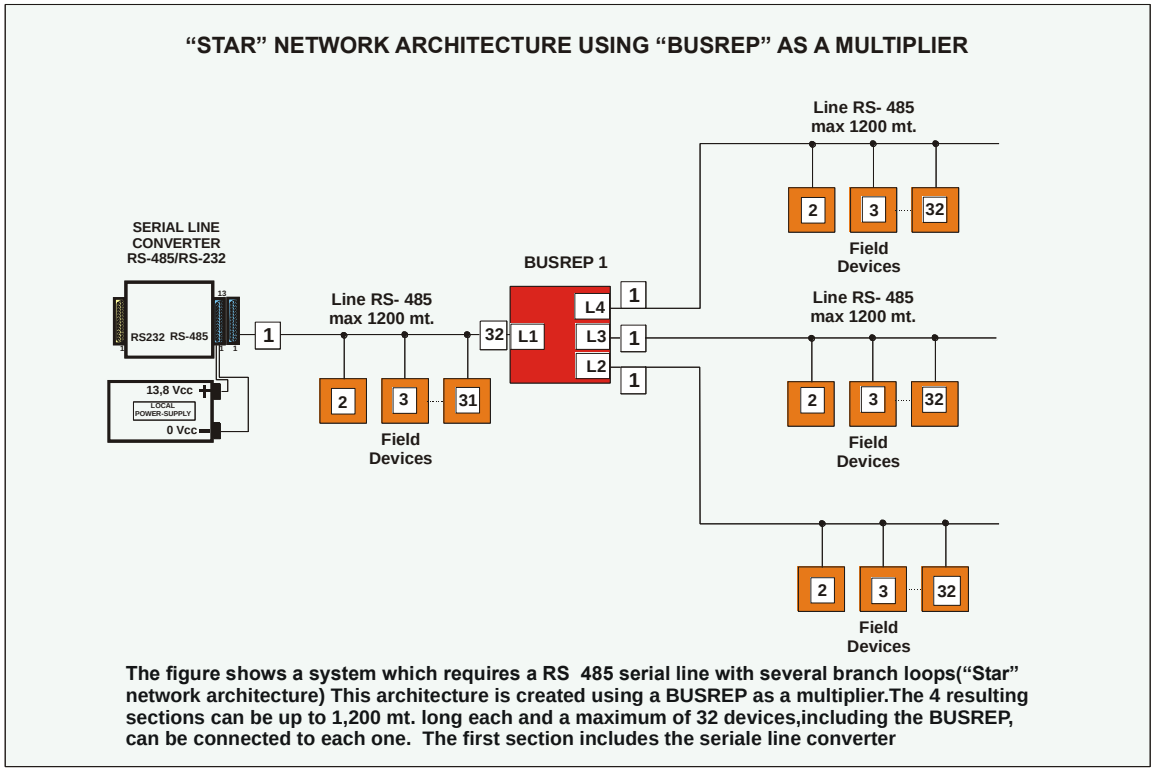

The figure shows a system which requires a RS 485 serial line with several branch loops("Star" network architecture) This architecture is created using a BUSREP as a multiplier.The 4 resulting sections can be up to 1,200 mt. long each and a maximum of 32 devices,including the BUSREP, can be connected to each one. The first section includes the seriale line converter

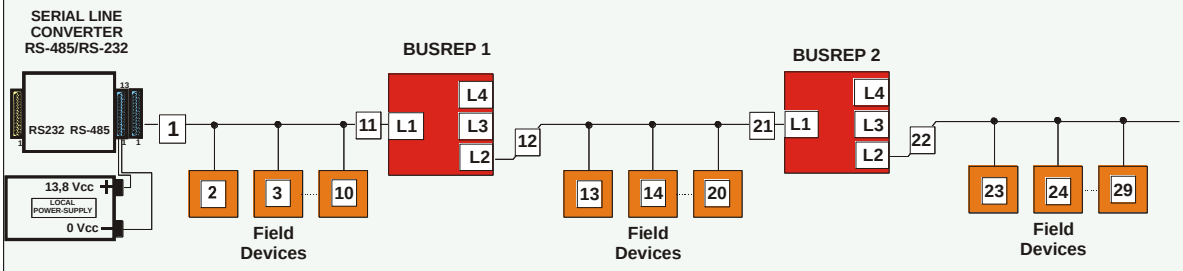

The figure shows a system which requires a RS 485 serial line that is longer than 1,200 metres.
Using two BUSREPs as regenerators, it was divided up into 3 sections each of which was shorter in length.
In this case there are less than 32 field devices, but they can be distributed on 3,600 metres-long line.

3.5 Remote Connection

To interface CORAL-PLUS barrier to PSTN modem (9600 b/s) it is necessary the conversion RS485 to RS232 and also the **cross conversion** shown below.

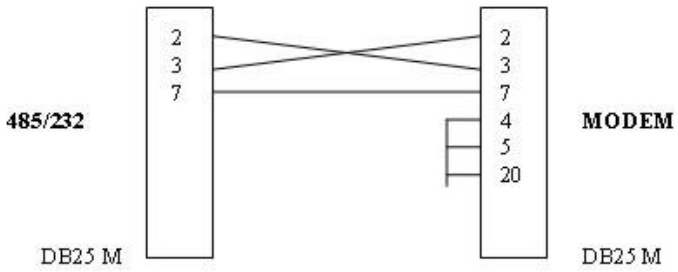

4. ADJUSTMENT AND TESTING

4.1 Adjustment and Testing

A built in electronic alignment, parameter set and test tool, is provided in the receiver head of the CORAL-PLUS barriers. This is a very useful system both for installation and periodical maintenance without any other instrument.

4.1.1 Transmitter Setting up

To remove the radome (frontal cover), screw off the 6 screws (3 in front and 3 on the back). After that open the radome, remember, when you open the radome, the contact on the connector J4 will be open (Tamper).

1. Connect the Alternating Current cables (19 or 24 V~) or Direct Current (24V⎓) to the terminals 1 and 2 of the terminal block MS1 present on the Power supply and battery charger circuit.

2. Check, on the “fastons” connected to the terminal block MS2, the presence of the DC supply voltage (13,8 V⎓).

3. Connect the “fastons” to the battery and remember to respect the polarity that means, red wire (Terminal 1 of MS2) to the positive of the battery and black wire (Terminal 2 MS2) to the negative of the battery.
   Attention : The wrong connection of the battery, will cause the interruption of the resettable fuse. Change the connections to re-establish the normal functionality.

4. Select one of the 16 available modulation channels using the hexadecimal switch (SW3) in one of the 16 available positions (from 0 to F).
   The utilization of one of these channels won’t modify the correct functionality of the barrier, however it’s always better select different channel for each barrier in order to be more safe.

   N.B. In the event that the signal of one barrier is intercepted by another barrier there will be interference between them and will be necessary synchronize the two transmitters.
   To synchronize two barriers, set one of them as master (it generate the synchronism signal) and the other as slave (it receive the synchronism signal), furthermore, set on the slave transmitter, the same channel as the master one.

5. Since to execute the vertical alignment is necessary to operate on the junction inside the head, is advisable to wait until the end of the alignment operation to close the head.

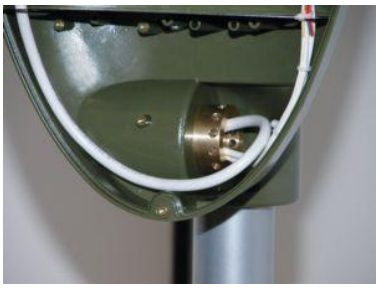

6. Finally close the MW head using the 6 screws to fix the radome.

N.B. Make sure that the tilt bulb (“Amp 1) is in the correct position in order to keep the tamper contact close (perpendicular as the ground).

4.1.2 Receiver setting up

To remove the radome (frontal cover) screw off the 6 screws (3 in front and 3 on the back). The opening of the radome will cause the opening of the tamper contact (J4).

1. Connect the Alternating Current cables (19 or 24 V~) or Direct Current (24V⎓) to the terminals 1 and 2 of the terminal block MS1 present on the power supply circuit.

2. Check on the “fastons”, connected to the terminal block MS2, the presence of the direct current (13,8 V⎓).

3. Connect the “fastons” to the battery and remember to respect the polarity that means, red wire (Terminal 1 of MS2) to the positive of the battery and black wire (Terminal 2 of MS2) to the negative of the battery.
   Attention : The wrong connection of the battery, will cause the interruption of the resettable fuse. Change the connections to re-establish the normal functionality.

4. To optimize the alignment of the barrier and set the parameters without any other instrument, use the integrated electronic system.
   To use the integrated electronic system in the correct way carry out the followings operations:

   a. Make sure that the micro-switch which is connected to the connector J4 is open.

   b. Turn the functions’ switch **SW1 in the position 1**. This operation enables the barrier installation procedure.

   c. Press the button **S1**. This operation sets the “fast regulation system” of the received signal, it generates an intermittent sound which indicates the signal level.

   d. Slacken the bracket’s screws, change the horizontal orientation on the **receiver** head in order to find the maximum signal.

   e. If during the orientation operation the sound‘s frequency increase, it means that the received signal is higher than the previous. If the signal is much more the sound can be continuous.

Press again the button S1, the sound will has a lower intermittent frequency.
Now change again the horizontal orientation.
In the event that during the orientation operation, the frequency of the intermittent sound decreases, means that the received signal is decreased, therefore move the head in the opposite direction.
The operation of horizontal alignment will be finish when the maximum signal will be found.

f. Slacken the bracket's screws to orientate the **transmitter** horizontally, repeat the operations explained in the "e" point.

N.B. The transmitter head doesn't have the S1 button, therefore to activate the "fast regulation system", cover temporarily the radiofrequency emission (for example, pass an hand in front of the transmitter's antenna) so that the alignment operation will be easy to execute alone.

g. When the best alignment will be found (the maximum signal available) lock the movement on the receiver and on the transmitter.

h. Unlock the vertical movement of the receiver head (Rx) and move it up. Press the button S1 or cover temporally the radiofrequency emission, and wait the stabilization of the intermittent sound. Move down slowly the head and find the maximum signal (see point "e").

i. Unlock the vertical movement of the transmitter head (Tx) and carry out the same operations than the receiver. Finally lock the movement of the transmitter and the receiver.

j. Turn the functions switch **SW1 in the position 2**, make sure that during this operation nothing is within the microwave beam, for example the operators don't walk between the transmitter and the receiver. Remember that this operation is very important because now the barrier acquire the value of the modulation channel and the value of the microwave signal. An alteration of the microwave beam in this moment will make incorrect the installation therefore it will be NOT safe. The acquisition operation starts some seconds after that the button S1 is pressed. When the acquisition operation will finish the 3 leds will turn on together and the buzzer will make some sounds (Beep) which indicate the quality of the alignment:

1 Beep	**=**	**Excellent Quality**
2 Beeps	**=**	**Good Quality**
3 Beeps	**=**	**Poor Quality**
4 Beeps	**=**	**Insufficient Quality**
5 or more Beeps	**=**	**Very bad Quality**

In the event that the alignment quality is poor or less, verify that nothing, fix or moving, is within the microwave beam and than repeat the alignment operations.

k. By setting function switch **SW1 to position 3**, it is possible to read or modify the barrier operating parameters, **Masking, Sensitivity**, type of **Response**. The Alarm, tamper and Fault led change function in this mode and indicate the values of the parameters stored in the barrier.
The alarm and masking thresholds are set with values one higher than the quiescent value of the received signal and one lower. They then determine if, at the end of the signal processing, the variation in received signal is sufficient to create an alarm.

To Read the actual value of the parameter:

- Rotate switch SW4 (MASK) until the first Green led (D6) comes on.
- Rotate switch SW5 (SENS) until the second Green led (D5) comes on.
- Rotate switch SW6 (RSP) until the third Green led (D4) comes on.
  The values read on these three switches indicate the values of the parameters in use by the barrier.

To Modify the actual alarm threshold values:

- Rotate the SW4 (MASK), SW5 (SENS) SW6 (RSP) switches to the required values.
- Push S3 to memorise the new threshold values.

The Masking thresholds are above and below the field value, which is stored during Parameter Acquisition (SW1 in position 2, see point “j”). They monitor slow changes in the received signal to see if they are big enough to change the detection performance of the barrier. These changes can be caused, for example, by snow accumulation along the protected area or by attempts to circumvent the barrier operation. Adjustment of the sensitivity of this function is via switch **SW4** (default = “8”). To decrease the sensitivity set a lower value: **“7”, “6”, “5”, “4”, “3”, “2”, “1”, “0”** The value “0” will disable this function. To increase the sensitivity set a higher value: **“9”, “A”, “B”, “C”, “D”, “E”, “F”.** Values that are too high can generate false alarms.

It is possible to set the **Sensitivity** of the barrier using switch **SW5**. The **default** setting is **“7”** and represents the optimum setting for most situations. To **increase the sensitivity** set this switch to a higher value, such as: **“8”, “9”, “A”, “B”, “C”, “D”, “E”, “F”**. To **decrease the sensitivity** set this switch to a lower value, such as: **“6”, “5”, “4”, “3”, “2”, “1”, “0”**. **Changes made to the sensitivity using SW5 have an effect on the dimensions of the sensitive area**, therefore an excessive increase in the sensitivity can lead to an increase in unwanted alarms, while an excessive decrease in sensitivity can reduce the ability of the barrier to detect real intrusions.

The **Response** of the barrier is set during manufacture to **”5” (default)** set on switch **SW6.** This setting is optimum for most situations**.** To obtain a different response adjust SW6 for the required response, based on the following table:

RESPONSE MODIFICATION	
SW6 Setting	**Response**
0	**Very High Decrease of Sensitivity** Use this for targets that are very big *or very* close *to the Tx and Rx heads.* (Big birds, cats that can jump close to the heads etc.)
1	**High Decrease of Sensitivity** T*argets that are big or very* close *to the heads* Tx *and* Rx
2	**Medium Decrease of Sensibility** Targets that are big *or very* close *to the heads* Tx *and* Rx
3	**Decrease of Sensitivity** Targets that are big or very near to the heads Tx *and* Rx
4	**Decrease of Sensitivity** *Equal for every target*
5	**Standard**
6	**Increase of Sensitivity** *Equal for every target*
7	**Increase of Sensitivity** *for small target* (crawling/rolling intruder)
8	**Medium increase of sensitivity** *for small targets*
9	**High increase of Sensitivity** *for small targets*

5. Turn the function switch SW1 to position 4, and the barrier will return to normal operation. The normal operation is also restored when the radome is closed, independent of the position of SW1.

   Pushing **S1** push button, will give an audible indication related to the quality of the alignment, as described in point ”j” and activates the **Walk Test** function. The barrier will operate with the parameters set using the software or using the **Sensitivity SW5** and **Response SW6** switches and every variation in the microwave signal in the sensitive zone will activate the buzzer found on the receiver board. The buzzer sounds intermittently, the frequency of which is dependent on the intensity of the disturbance signal, and if the frequency increases it means that the disturbance has increased (which indicates a deeper penetration into the protected area). If the disturbing signal is sufficient to generate an alarm condition the buzzer will give a continuous tone. In this way it is possible to evaluate the real consistency of the sensitive zone and also to check if there are any sources of interference present (badly fixed fences, etc.), affecting the protection. If the walk test results do not satisfy the protection requirements of the zone, adjust the sensitivity of the CORAL-PLUS barrier as shown in point “k”)

4.2 Alignment and monitoring with software

To display and manage the software parameters of the Coral Plus, comprising the analogue threshold and received signal values, alarm status indication and the history, it is possible to use a PC running the CIAS **Wave-Test2** program**;** Refer to the program technical documentation for connection procedures and/or management of the software functions.

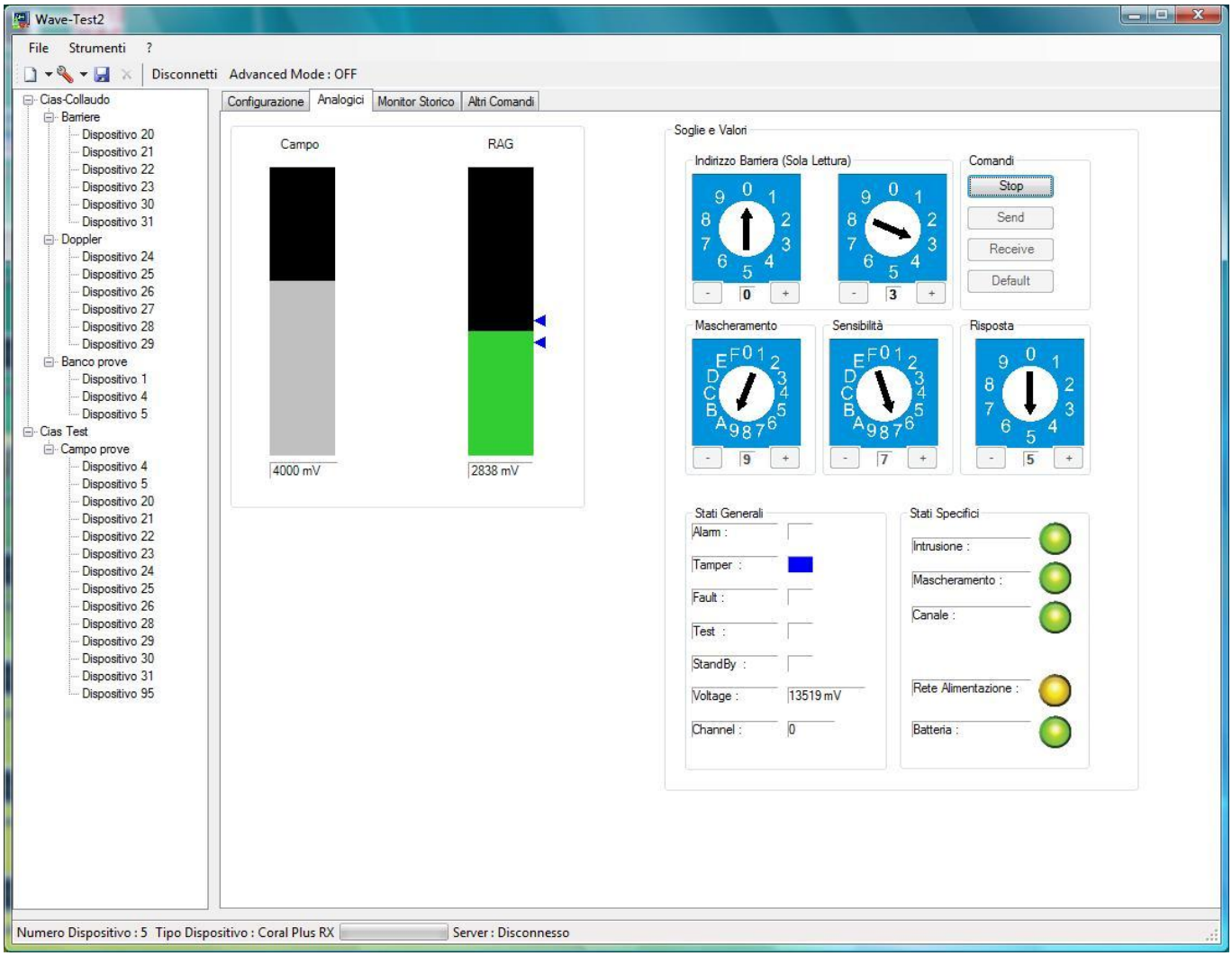

5. MAINTENANCE AND ASSISTANCE

5.1 Troubleshooting

In case of false alarm, check the parameters recorded during the **Installation** phase (on attached **Test Sheet**), if there are divergences with permitted limits check again the related points in chapter "Adjustment and Testing (4)"

Defect	Possible Cause	Possible Solution
Main Power supply LED off Tx and/or Rx	Power Supply 19 V~ or 24V⎓ missing	Check out the Primary and Secondary power supply of the Transformer
	F2 Fuse of Power Supply Circuit broken	Change the fuse
	Connections broken	Ad just the connections
	Power Supply circuit broken	Change the Electronic board
Fault Led OFF	Supply Voltage too high or too low	Check the battery voltage and the power supply circuit
	Tx Low Frequency Oscillator	Change the Tx Electronic board
	Tx MW Oscillator Fault	Change the MW Oscillator
	Tx or Rx failures	Change the Electronic board (Tx or Rx)
Alarm Led OFF	Movement or obstacles in the protected field	Check out that the protected field is free from obstacles and free from objects and/or people moving.
	Barrier not properly aligned	Re do the alignment procedure as described in points: a,b,c,d,e,f,g,h,l,j of chapter 4.1.2
	Wrong channel selections	Do again the Channel acknowledge procedure as described in point j of chapter 4.1.2
High AGC Voltage	Barrier not properly aligned	Re do the alignment procedure as described in points: a,b,c,d,e,f,g,h,l,j of chapter 4.1.2
	Obstacles within the MW beam	Remove obstacles
	Too low signal transmitted	Check the transmitter
	Rx circuit fault	Change the Rx circuit
	Rx MW detector fault	Change the RX MW detector
Tamper Led OFF	Micro switch open	Check the micro switch position
	Tilt bulb in wrong position	Check the position of the tilt bulb

5.2 Maintenance kits

The **Maintenance Kits** are composed by circuits equipped with microwave cavities, always for 220 m. range, their substitution is very easy: Unlock the fixing screws and install the new circuits and cavities.

The circuit and cavity substitution on boot transmitter and receiver heads doesn't changes the heads alignment, and so no new mechanical alignment is required, but it is necessary the acquisition of the field value and of the channel number see chapter 4.1.2

6. CHARACTERISTICS

6.1 Technical characteristics

TECHNICAL CARACTERISTICS	Min	Nom	Max	Note
Working Frequency F1		10.58 GHz		
Working Frequency F2		9.9 GHz		
Working Frequency F3		9.46 GHz		
Working Frequency F4		10.525 GHz		
Maximum power	20mW		500 mW	e.i.r.p.
Modulation		Pulsed		on/off
Duty-cycle	-	50/50	-	-
Number of channels	-	-	16	-
Range:				
CORAL-PLUS100	-	100 m	-	-
CORAL-PLUS220	-	220 m	-	-
Power supply (19V ~)	17 V	19 V	24 V	-
Current absorption TX in surveillance (mA ~)	-	150	-	-
Current absorption RX in surveillance (mA ~)	-	140	-	-
Current absorption RX in alarm (mA ~)	-	130	-	-
Power supply (13.8V ⎓)	11,5 V	13,8 V	14,8 V	-
Current absorption TX in surveillance (mA ⎓)	-	65	-	-
Current absorption RX in surveillance (mA ⎓)	-	60	-	-
Current absorption RX in alarm (mA ⎓)	-	54	-	-
Power supply (24V ⎓)	20 V	24 V	30V	-
Current absorption TX in surveillance (mA ⎓)	-	76	-	-
Current absorption RX in surveillance (mA ⎓)	-	66	-	-
Current absorption RX in alarm (mA ⎓)	-	60	-	-
Housing for battery	-	-	-	12Vn/2Ah
Intrusion alarm contact (TX+RX)	-	-	100mA	NC
Radome removal contact (TX+RX)	-	-	100mA	NC
Fault contact (TX+RX)	-	-	100mA	NC
Intrusion alarm (TX+RX) Green LED ON	-	-	-	Not active
Radome removal (TX+RX) Green LED ON	-	-	-	Not active
Fault alarm (TX+RX) Green LED ON			-	Not active
Threshold adjustment	-	-	-	On board
Weight without battery (TX)	-	2930 g	-	-
Weight without battery (RX)	-	2990 g	-	-
Width			300 mm	
Height	-	-	390 mm	-
Deep, brackets included	-	-	270 mm	-
Working temperature	-25 °C	-	+55 °C	-
Performance Level	III Livello			
Box protection level	IP55			

6.2 Functional Characteristics

1	Analysis	Modulation channel frequency processing (16 channels)
2	Analysis	Absolute received signal value processing, To guarantee the S/N optimal value (Low level signal).
3	Analysis	Absolute received signal value processing, for fault detection, behaviour deterioration, masking.
4	Analysis	Signal trend to select various cases of AGC behaviour..
5	Analysis	DC Power supply voltage processing (battery charger), High or Low.
6	Analysis	AC Power supply voltage processing, Presence or Absence.
7	Analysis	Tampering of Tx and Rx heads.
8	Availability	Stand-by input control, for monitor adjustment and historical inhibition, living always active the alarm status generation.
9	Availability	Test input control, to procure on receiver the alarm relay activation in case of positive result.
10	Activation	Three static relay output for alarm, tamper, fault on receiver and transmitter.
11	Activation	Three signalling LED for alarm, tamper, fault on receiver and transmitter
12	Activation	Synchronism signal output of transmitter for the other transmitters synchronization
13	Activation	Synchronism signal input on transmitter for the local transmitter synchronization
14	Availability	Output terminal block for the battery 12 V/2 Ah connection in case of mains absence.
15	Availability	16 positions switch for modulation channel frequency choice. During the installation phase the receiver identifies and store automatically which channel must be used during working phase.
16	Availability	On the receiver of an acoustic system for the electronic alignment, acquisition of the alignment values, quality of the alignment, and walk test, without any other external instrument
17	Availability	On the transmitter also on the receiver there's one connector to measurement.

SCHEDA DI COLLAUDO – TEST SHEET

CORAL-PLUS TX

NUMERO DI SERIE
SERIAL NUMBER: _____

Cliente/Customer _____

Indirizzo/Address _____

Barriera /Barrier N° _____

VALORI MISURATI SUL TRASMETTITORE – MEASURED VALUES ON THE TRASMITTER				
MISURE MEASUREMENTS		**VALORI TIPICI STANDARD VALUES**	**VALORI MISURATI MEASURED VALUES**	
			INSTALLAZIONE INSTALLATION	**MANUTENZIONE MAINTENANCE**
1	TENSIONE DI ALIMENTAZIONE, MISURATA TRA I PIN 1-2 DI MS1, CON BATTERIA SCOLLEGATA. (*) SUPPLY VOLTAGE, MEASURED BETWEEN PINS 1-2 OF MS1 WITH BATTERY DISCONNECTED. (*)	13,8 V⎓ ± 10%		
2	TENSIONE DI ALIMENTAZIONE INTERNA MISURATA TRA IL PIN 16 DI J3 E GND. (*) INSIDE SUPPLY VOLTAGE MEASURED BETWEEN PIN 16 OF J3 AND GND. (*)	8 V⎓ ± 10%		
3	TENSIONE DI ALIMENTAZIONE INTERNA, MISURATA TRA IL PIN 12 DI J3 E GND. (*) INSIDE SUPPLY VOLTAGE MEASURED BETWEEN PIN 12 OF J3 AND GND. (*)	5 V ± 10%		
4	TENSIONE OSCILLATORE FUNZIONANTE MISURATA TRA IL PIN 13 DI J3 E GND. (*) OSCILLATOR OK VOLTAGE MEASURED BETWEEN PIN 13 OF J3 AND GND. (*)	4 V ± 10%		
5	SELEZIONE MASTER/SLAVE MASTER/SLAVE SELECTION	-	☐ MASTER ☐ SLAVE	☐ MASTER ☐ SLAVE
6	CANALE DI MODULAZIONE SELEZIONATO MODULATION CHANNEL SELECTED	-	☐ Ch 0 ☐ Ch 8 ☐ Ch 1 ☐ Ch 9 ☐ Ch 2 ☐ Ch A ☐ Ch 3 ☐ Ch B ☐ Ch 4 ☐ Ch C ☐ Ch 5 ☐ Ch D ☐ Ch 6 ☐ Ch E ☐ Ch 7 ☐ Ch F	☐ Ch 0 ☐ Ch 8 ☐ Ch 1 ☐ Ch 9 ☐ Ch 2 ☐ Ch A ☐ Ch 3 ☐ Ch B ☐ Ch 4 ☐ Ch C ☐ Ch 5 ☐ Ch D ☐ Ch 6 ☐ Ch E ☐ Ch 7 ☐ Ch F

(*) misura può essere effettuata anche con lo strumento STC 95
(*) It is possible to make the measure also by the STC 95

TAGLIARE QUI / CUT HERE

OSSERVAZIONI DELL'INSTALLATORE – INSTALLER COMMENTS

_____

_____

_____

_____

Data installazione/Installation date _____

Firma Installatore/Installer Signature _____

SCHEDA DI COLLAUDO – TEST SHEET

CORAL-PLUS RX

NUMERO DI SERIE
SERIAL NUMBER: _____

Cliente/Customer _____

Indirizzo/Address _____

Barriera /Barrier N° _____

VALORI MISURATI SUL RICEVITORE – MEASURED VALUES ON THE RECEIVER

	MISURE MEASUREMENTS	VALORI TIPICI STANDARD VALUES	VALORI MISURATI MEASURED VALUES	
			INSTALLAZIONE INSTALLATION	MANUTENZIONE MAINTENANCE
1	TENSIONE DI ALIMENTAZIONE, MISURATA TRA I PIN 1-2 DI MS1, CON BATTERIA SCOLLEGATA. (*) SUPPLY VOLTAGE, MEASURED BETWEEN PINS 1-2 OF MS1 WITH BATTERY DISCONNECTED. (*)	13,8 V⎓ ± 10%		
2	TENSIONE DI ALIMENTAZIONE INTERNA, MISURATA TRA IL PIN 12 DI J3 E GND. (*) INSIDE SUPPLY VOLTAGE MEASURED BETWEEN PIN 12 OF J3 AND GND. (*)	5 V⎓ ± 10%		
3	TENSIONE DI RAG, MISURATA TRA IL PIN 14 DI J3 E GND. (*) AGC VOLTAGE MEASURED BETWEEN PIN 14 OF J3 AND GND. (*)	2,5 ÷ 6 V⎓		
4	VERIFICA SEGNALE RIVELATO, MISURATA CON LO STRUMENTO STC 95. SIGNAL DETECTED VOLTAGE MEASURED BY STC 95.	6 V⎓ ± 10% STABILE STEADY		
5	CANALE DI MODULAZIONE UTILIZZATO MODULATION CHANNEL USED	-	☐ Ch 0 ☐ Ch 8 ☐ Ch 1 ☐ Ch 9 ☐ Ch 2 ☐ Ch A ☐ Ch 3 ☐ Ch B ☐ Ch 4 ☐ Ch C ☐ Ch 5 ☐ Ch D ☐ Ch 6 ☐ Ch E ☐ Ch 7 ☐ Ch F	☐ Ch 0 ☐ Ch 8 ☐ Ch 1 ☐ Ch 9 ☐ Ch 2 ☐ Ch A ☐ Ch 3 ☐ Ch B ☐ Ch 4 ☐ Ch C ☐ Ch 5 ☐ Ch D ☐ Ch 6 ☐ Ch E ☐ Ch 7 ☐ Ch F

(*) misura che può essere effettuata anche con lo strumento STC 95
(*) It is possible to make the measure also by the STC 95

OSSERVAZIONI DELL'INSTALLATORE – INSTALLER COMMENTS

_____

_____

_____

_____

Data installazione/Installation date _____

Firma Installatore/Installer Signature _____

TAGLIARE QUI / CUT HERE

NOTE:

NOTE:

NOTE:

Con la presente, CIAS Elettronica, dichiara che questo rivelatore di intrusione "CORAL-PLUS " è conforme ai requisiti essenziali ed alle altre disposizioni rilevanti della Direttiva 1999/5/CE (Art.3.1$_a$-3.1$_b$-3.2)
Hereby, CIAS Elettronica, declares that this movement detector "CORAL-PLUS " is in compliance with the essential requirement and other relevant provisions of Directive 1999/5/EC (Art.3.1$_a$-3.1$_b$-3.2)

CE 0682

IMQ: III° livello

CEI 79-2

Questo apparecchio è contrassegnato in conformità alla Direttiva Europea 2002/96/EC, Waste Electrical and Electronic Equipment (WEEE)
Assicurandosi che questo prodotto sia smaltito in modo corretto, l'utente contribuisce a prevenire le potenziali conseguenze negative per l'ambiente e la salute.

Il simbolo sul prodotto o sulla documentazione d'accompagnamento indica che questo prodotto non deve essere trattato come rifiuto domestico ma deve essere consegnato presso l'idoneo punto di raccolta per il riciclaggio d'apparecchiature elettriche ed elettroniche.
Disfarsene seguendo le normative locali per lo smaltimento rifiuti.
Lo smaltimento abusivo è punito con le sanzioni previste dalla legislazione nazionale vigente
Il prodotto può essere riconsegnato al distributore/installatore a fine vita in occasione di un nuovo acquisto.

This product is marked in compliance with the European Directive 2002/96/EC, Waste Electrical and Electronic Equipment (WEEE).
The correct disposal of the product will prevent potential negative consequences for the environment and the human health.

The symbol on the product or into the annexed documentation indicates that this product does not have to be dealt like domestic refusal but must be delivered near the suitable point of collection for the recycling of electrical and electronic equipment.
The illicit disposal will be endorsed according to local l regulations.
At the end of operative life the product can be given back to the vendor/installation organization in occasion of a new purchase.

© Copyright CIAS Elettronica S.r.l.
Stampato in Italia / Printed in Italy

CIAS Elettronica S.r.l.
Direzione, Ufficio Amministrativo, Ufficio Commerciale, Laboratorio di Ricerca e Sviluppo
Direction, Administrative Office, Sales Office, Laboratory of Research and Development
20158 Milano, via Durando n. 38
Tel. +39 02 376716.1
Fax +39 02 39311225
Web-site: www.cias.it
E-mail: info@cias.it
Stabilimento / Factory
23887 Olgiate Molgora (LC), Via Don Sturzo n. 17