CYPRESS
INTEGRATION SOLUTIONS

Handheld OSDP COMSET Tool

OTT-2100

Product Manual

MADE IN USA

RoHS

OTT-2100_Manual_221208

©2022 Cypress Computer Systems
1778 Imlay City Road, Lapeer, MI 48446 800-807-2977

Cypress OTT-2100 Manual - Product Overview & Specifications

The OTT-2100 is a pocket-sized device for quickly and easily configuring the address and baud rate of an OSDP reader or other Peripheral Device without a tablet device, laptop PC, desktop PC, or access controller. A technician can use the OTT-2100 to set the address and baud rate of OSDP readers before they are installed in the field, or after installation.

The address and baud rate are set with DIP switches on the device. Three LEDs display the state of the OTT-2100 and the OSDP communication session. The OTT-2100 will switch the polarity of the OSDP lines so it can communicate with the OSDP reader, making it easier to connect to OSDP devices.

Specifications		
Part Number	Part Number	OTT-2100
	UPC	816684004636
Physical	Physical Dimensions (L x W x H)	3.00 x 1.375 x 0.975 inches | 7.5 x 3.5 x 2.5 cm
	Weight	1 oz. | 28.35 grams
Environmental	Operating Temperature Range	-40ºF to 158ºF | -40ºC to 70ºC
	Enclosure Rating	Not rated for water or dust intrusion
Electrical	Battery	3 VDC, 225 mAh
		CR2032 coin cell, non-rechargeable
		Lithium Manganese Dioxide (LiMnO2)
Additional Features	Sleep Mode to save battery life. Low battery indicator.	
	OSDP polarity switching to make connecting to OSDP readers easier.	
	Firmware upgradable using the OSDP file transfer protocol.	
	Small, pocket size.	
	Field-serviceable battery.	
	Multiple operating modes: COMSET, Listening, and Firmware Update modes.	

Cypress OTT-2100 Manual - Table of Contents

Table of Contents

Topic	***Page***
Overview and Specifications	2
Physical Features	4
Dimensions	5
Installing the Battery	6
Wiring Diagram: COMSET Mode	7
Wiring Diagram: Listening Mode	8
Wiring Diagram: Firmware Update Mode	9
Status LEDs	10
DIP Switches	11
Address DIP Switch Tables	12-14
Operating Modes: COMEST Mode	15-16
Operating Modes: Listening Mode	17-18
Operating Modes: Firmware Update Mode	19
Operating Modes: Cypress SCBK Reset Mode	20
OSDP Terminology	21

Cypress OTT-2100 Manual - Physical Features

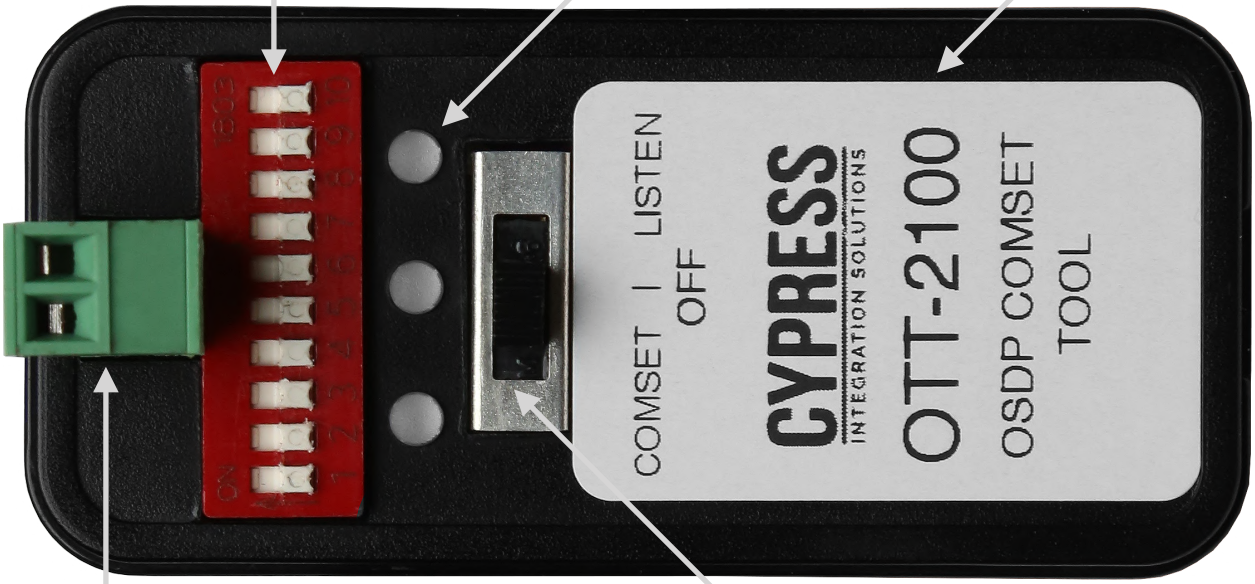

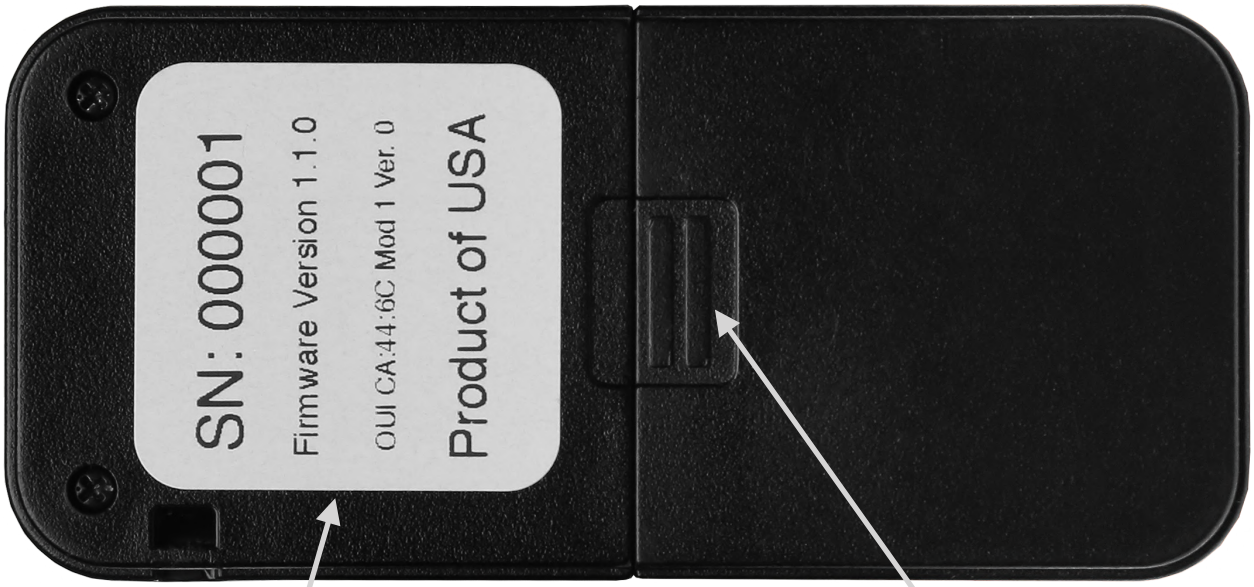

0.975 inches thick

3.00 inches

1.375 inches

Cypress OTT-2100 Manual - Installing the Battery

The OTT-2100 includes one CR2032 3V, 225 mAh coin cell battery. The OTT-2100 ships with the battery in a plastic bag, and it must be installed by the user before the OTT-2100 can be used.

The battery compartment is on the back of the OTT-2100. The battery must be installed with the **+** side visible, as shown in the picture below.

Cypress OTT-2100 Manual - Wiring Diagram: COMSET Mode

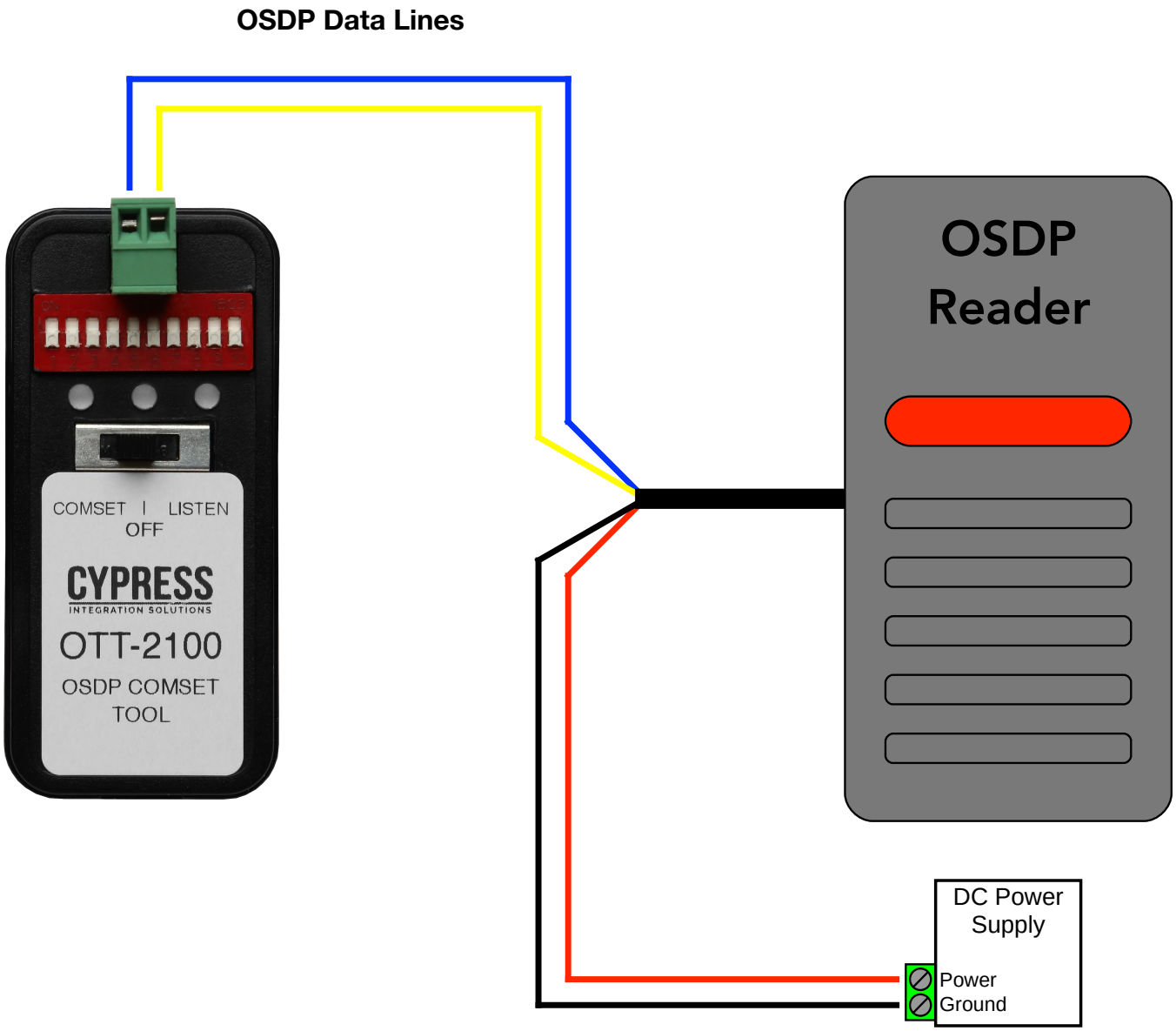

Cypress OTT-2100 Manual - Wiring Diagram: Listening Mode

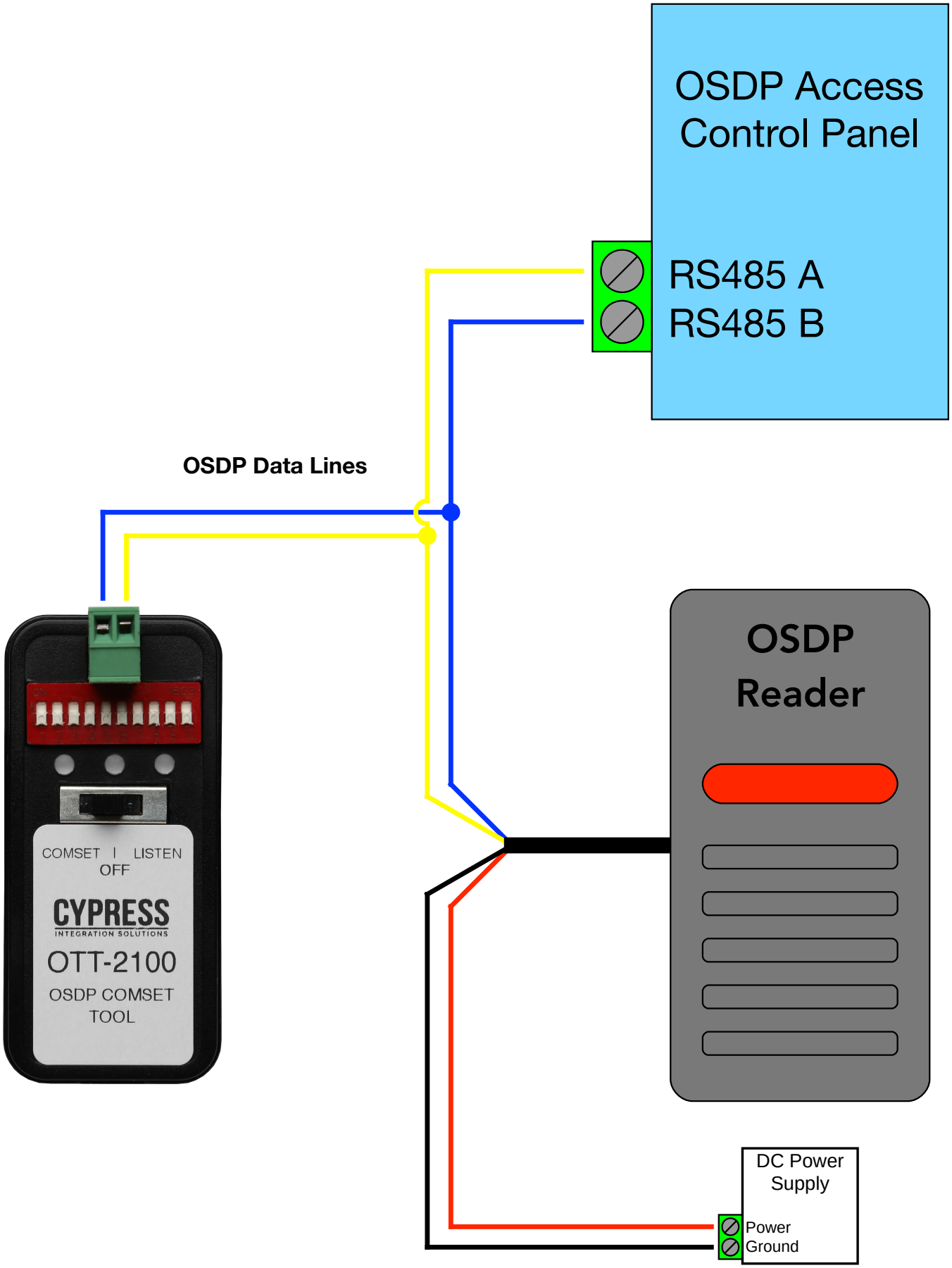

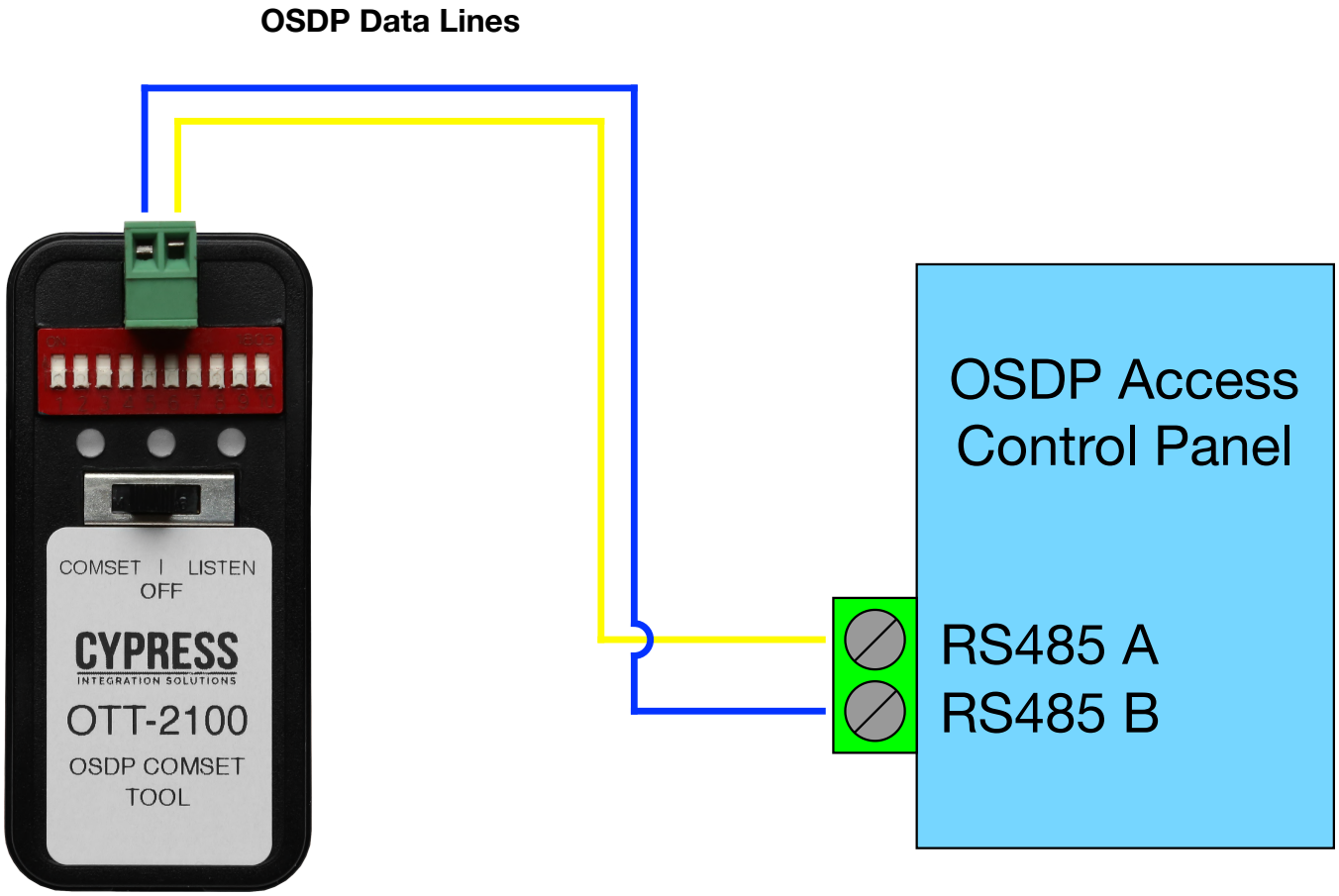
OSDP Data Lines
COMSET | LISTEN
OFF
CYPRESS
INTEGRATION SOLUTIONS
OTT-2100
OSDP COMSET
TOOL
OSDP Access
Control Panel
RS485 A
RS485 B

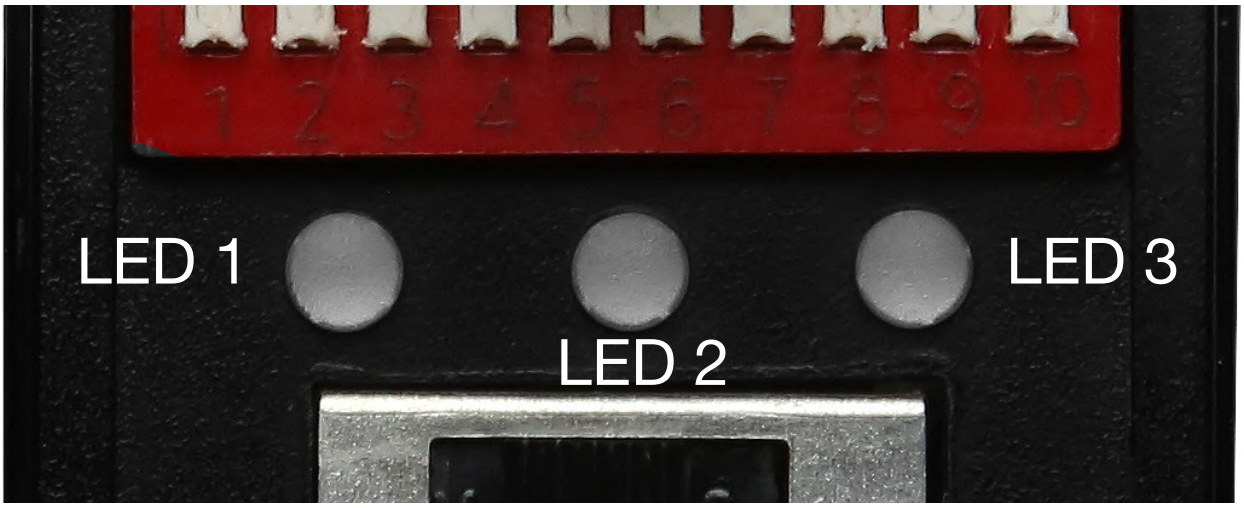

The OTT-2100 has three RGB LEDs that show the status of the device. The LED displays are different, depending on the operating mode the unit is in. There are LED tables showing the states and meanings of the three LEDs in each of the operating mode sections of this manual. When the device is powered on in any mode, LED 2 (center) will display the power up sequence. LED 2 will briefly flash red, then green, then blue. See the LED tables in the COMSET Mode, Listening Mode, and Firmware Update Mode sections for specific LED behavior in each mode.

In COMSET Mode, Listening Mode, and Firmware Update Mode LED 1 will be solid red when the battery voltage is low.

Sleep Mode

The OTT-2100 enters Sleep Mode when none of the switches have been used for more than 2.5 minutes (150 seconds). The OTT-2100 exits Sleep Mode when it is power cycled by moving the Power/Mode switch to the center position and then to the left or right position. The purpose of Sleep Mode is to save battery life.

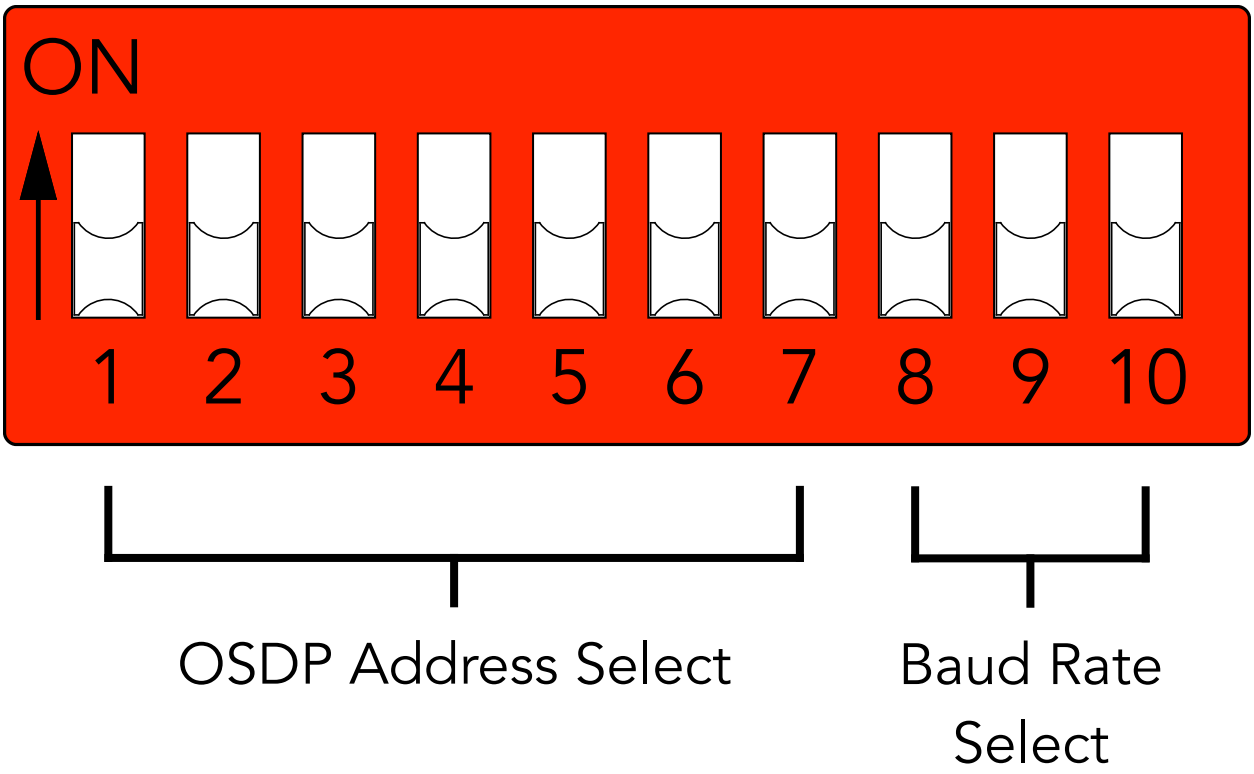

The OTT-2100 has a 10 position DIP switch bank that is used to select the OSDP address and the baud rate that the OTT-2100 will configure in the connected OSDP reader or PD. The DIP switch is ON when the switch is pushed away from the number on the DIP switch bank, or towards the 2-pin header/connector. The DIP switch is OFF when the switch is pushed toward the number on the DIP switch bank, or towards the Status LEDs.

DIP switches 1-7 are used to select the desired OSDP address. Addresses 0-126 are available, see the OSDP address tables on the following pages for how set the DIP switches for the desired OSDP address.

DIP switches 8-10 are used to select the desired baud rate. See the table below on this page for how to set the DIP switches for the desired baud rate.

Baud Rate	8	9	10
9600			
19200			X
38400		X	
57600		X	X
115200	X		
230400	X		X

X = ON

Cypress OTT-2100 Manual - Address DIP Switch Tables

Address	1	2	3	4	5	6	7
0							
1							X
2						X	
3						X	X
4					X		
5					X		X
6					X	X	
7					X	X	X
8				X			
9				X			X
10				X		X	
11				X		X	X
12				X	X		
13				X	X		X
14				X	X	X	
15				X	X	X	X
16			X				
17			X				X
18			X			X	
19			X			X	X
20			X		X		
21			X		X		X
22			X		X	X	
23			X		X	X	X
24			X	X			
25			X	X			X
26			X	X		X	
27			X	X		X	X

X = ON

Address	1	2	3	4	5	6	7
28			X	X	X		
29			X	X	X		X
30			X	X	X	X	
31			X	X	X	X	X
32		X					
33		X					X
34		X				X	
35		X				X	X
36		X			X		
37		X			X		X
38		X			X	X	
39		X			X	X	X
40		X		X			
41		X		X			X
42		X		X		X	
43		X		X		X	X
44		X		X	X		
45		X		X	X		X
46		X		X	X	X	
47		X		X	X	X	X
48		X	X				
49		X	X				X
50		X	X			X	
51		X	X			X	X
52		X	X		X		
53		X	X		X		X
54		X	X		X	X	
55		X	X		X	X	X

X = ON

Cypress OTT-2100 Manual - DIP Switch Tables (continued)

Address	1	2	3	4	5	6	7
56		X	X	X			
57		X	X	X			X
58		X	X	X		X	
59		X	X	X		X	X
60		X	X	X	X		
61		X	X	X	X		X
62		X	X	X	X	X	
63		X	X	X	X	X	X
64	X						
65	X						X
66	X					X	
67	X					X	X
68	X				X		
69	X				X		X
70	X				X	X	
71	X				X	X	X
72	X			X			
73	X			X			X
74	X			X		X	
75	X			X		X	X
76	X			X	X		
77	X			X	X		X
78	X			X	X	X	
79	X			X	X	X	X
80	X		X				
81	X		X				X
82	X		X			X	
83	X		X			X	X

X = ON

Address	1	2	3	4	5	6	7
84	X		X		X		
85	X		X		X		X
86	X		X		X	X	
87	X		X		X	X	X
88	X		X	X			
89	X		X	X			X
90	X		X	X		X	
91	X		X	X		X	X
92	X		X	X	X		
93	X		X	X	X		X
94	X		X	X	X	X	
95	X		X	X	X	X	X
96	X	X					
97	X	X					X
98	X	X				X	
99	X	X				X	X
100	X	X			X		
101	X	X			X		X
102	X	X			X	X	
103	X	X			X	X	X
104	X	X		X			
105	X	X		X			X
106	X	X		X		X	
107	X	X		X		X	X
108	X	X		X	X		
109	X	X		X	X		X
110	X	X		X	X	X	
111	X	X		X	X	X	X

X = ON

Address	1	2	3	4	5	6	7
112	X	X	X				
113	X	X	X				X
114	X	X	X			X	
115	X	X	X			X	X
116	X	X	X		X		
117	X	X	X		X		X
118	X	X	X		X	X	
119	X	X	X		X	X	X
120	X	X	X	X			
121	X	X	X	X			X
122	X	X	X	X		X	
123	X	X	X	X		X	X
124	X	X	X	X	X		
125	X	X	X	X	X		X
126	X	X	X	X	X	X	

X = ON

Overview

The OTT-2100 is put into COMSET Mode by pushing the Power/Mode Switch to the left position as indicated on the Product Label. Only one OSDP reader or PD can be connected to the OTT-2100 while in COMSET mode.

COMSET Mode is used to set the address and baud rate of a single OSDP reader or other Peripheral Device (PD). The desired address and baud rate can be set before the OTT-2100 is powered on in COMSET Mode, or while the OTT-2100 is powered on in COMSET Mode. When the DIP switches change while the OTT-2100 is powered on in COMSET Mode, it will restart the COMSET process with the new parameters automatically.

The OTT-2100 has an OSDP polarity switching feature, which allows the device to communicate with the reader or PD no matter the polarity of the connected OSDP lines.

When the OTT-2100 is connected to a PD and is powered on in COMSET Mode, it will do the following:

1. Attempt to communicate with the PD, regardless of the current address and baud rate configuration.
2. Attempt to set the PD's address and baud rate to the selected values.
3. Attempt to start a Secure Channel Session with the default OSDP Secure Channel Base Key (SCBK-D).

The table below shows the different LED states and meaning for those states for each of the 3 LEDs in COMSET Mode.

General Instructions

1. Set the desired address and baud rate using the DIP switches.
2. Connect the single OSDP reader or PD to the OTT-2100 by connecting the two OSDP data lines to the removable screw terminal block. The polarity of the OSDP data lines does not matter, as the polarity switching feature will allow communication regardless of the polarity.
3. Turn the Power/Mode switch to the left position to power the OTT-2100 on in COMSET Mode.
4. LED 1 will be flashing blue while the OTT-2100 is attempting to establish communication with the OSDP reader.
5. Once the OTT-2100 has established communication with the OSDP reader LED 1 will be flashing green.
6. LED 1 will continue flashing green while communicating with the OSDP reader. Once the OSDP reader address and baud rate have been configured, LED 2 will turn solid green.
7. After the address and baud rate have been configured the OTT-2100 will attempt to start a Secure Channel session with the OSDP reader. LED 3 will be solid green when communicating with the OSDP reader in a Secure Channel session with the default Secure Channel Base Key (SCBK).

COMSET Mode LED Table

LED	LED State	Meaning
LED 1	Flashing Green	Communicating with the PD
LED 1	Flashing Blue	Searching for PD
LED 1	Solid Red	Low battery voltage
LED 2	Solid Green	PD's address and baud rate have been set to the selected values
LED 2	Solid Blue	PD accepted the new address, but rejected the new baud rate
LED 2	Solid Red	PD did not send COM reply after the COMSET command was sent (COMSET failed)
LED 3	Solid Green	PD has the default OSDP Secure Channel Base Key (SCBK)
LED 3	Solid Blue	PD has a custom OSDP Secure Channel Base Key (SCBK), not default
LED 3	Solid Red	PD is not capable of Secure Channel sessions (rejects any attempt)

Overview

The OTT-2100 is put into Listening Mode by pushing the Power/Mode Switch to the right position as indicated on the Product Label. Multiple OSDP readers or PDs can be connected to the OSDP bus while the OTT-2100 is in Listening Mode.

Listening Mode is used to listen to an OSDP communication session between a reader or PD and an Access Control Unit (ACU) to determine basic functionality of the OSDP system. While in Listening Mode, the DIP switches are used to select the address of the PD and the baud rate of the communication session.

In Listening Mode the OTT-2100 can indicate the following:

- Commands in Unencrypted Communication or Secure Channel sessions sent from the ACU to the PD.
- Replies in Unencrypted Communication or Secure Channel sessions sent from the PD to the ACU.
- Communication session reset initiated the ACU.
- NAK reply sent from the PD to the ACU (indicates bad interaction).
- Reply other than ACK, NAK, or RAW sent from the PD to the ACU (I/O and misc. messages).
- RAW reply (credential data) sent from PD to ACU.
- Bad messages (CRC/Checksum error).

These events in the OSDP communication session The OTT-2100 is put into Listening Mode by pushing the Power/Mode Switch to the right position as indicated on the Product Label.

General Instructions

1. Using the DIP switches, set the address to match the address of the PD and baud rate of the OSDP communication session between the ACU and PD.
2. Connect two OSDP data lines used by the ACU and PD to the removable screw terminal block on the OTT-2100. The polarity of the OSDP data lines does not matter, as the polarity switching feature will allow communication regardless of the polarity.
3. Turn the Power/Mode switch to the right position to power the OTT-2100 on in Listening Mode.
4. Observe the states of LED 1, LED 2, and LED 3. The LEDs indicate the type OSDP commands and replies sent between the ACU and PD.

Listening Mode LED Table

LED	LED State	Meaning
LED 1	Flashing Green	ACU sent a command to the PD while in a Secure Channel session (encrypted)
LED 1	Flashing Blue	ACU sent a command to the PD while in a Unencrypted Communication session
LED 1	Flashing Red	ACU reset the communication session with the PD
LED 1	Solid Red	Low battery voltage
LED 2	Flashing Green	PD sent a reply to the ACU while in a Secure Channel session (encrypted)
LED 2	Flashing Blue	PD sent a reply to the ACU while in a Unencrypted Communication session
LED 2	Flashing Red	PD replied to the ACU with a NAK*
LED 3	Flashing Green	PD sent RAW reply (credential data) to ACU
LED 3	Flashing Blue	PD sent any reply that other than ACK, NAK, or RAW*
LED 3	Flashing Red	ACU/PD message with bad CRC/Checksum error (bad message)

* Definitions of NAK, ACK, and RAW OSDP replies. See also page 21 for a list of defined OSDP terms used in this document.

NAK: Negative acknowledge reply from the PD. Indicates the PD had an error processing the previous command.

ACK: Positive acknowledge reply from the PD. The PD properly processed the previous command or nothing to report to ACU.

RAW: PD reply with card data payload. Card data is a raw string of bits.

Overview

The OTT-2100 is put into Firmware Update Mode by turning on all 10 DIP switches and pushing the Power/Mode Switch to the left or right position.

Firmware Update Mode is used to update the firmware of the OTT-2100. While in Firmware Update Mode the OTT-2100 acts as a PD and accepts firmware files over the osdp_FILETRANSFER protocol. The OTT-2100 must be connected to an ACU capable of file transfer and have the ACU send it an OTT-2100 firmware image.

When the OTT-2100 is powered on in Firmware Update Mode as a PD, the address is set to 0 and the baud rate is set to 9600. The address and baud rate can be changed with the COMSET command, but these changes are only for the current communication session and do not persist through power cycle.

General Instructions

1. Set all 10 DIP switches to the ON position.
2. Connect the OTT-2100 to a FILETRANSFER capable ACU.
3. Turn the Power/Mode switch to either the left or right position to power the OTT-2100 on in Firmware Update Mode.
4. LED 1 will be flashing red while it is waiting to be polled by the ACU. Once the OTT-2100 is being polled by the ACU, LED 1 will be flashing green if in a Secure Channel session or flashing blue is in a Unencrypted Communication session.
5. The user needs to have the ACU initiate the FILETRANSFER with the OTT-2100 using the OTT-2100 firmware file.
6. LED 2 will be flashing green when the FILETRANSFER is in progress.
7. LED 3 will be solid green if the FILETRANSFER is successful and the OTT-2100 will restart. LED 3 will be solid red if the FILETRANSFER is unsuccessful.

Firmware Update Mode LED Table

LED	LED State	Meaning
LED 1	Flashing Green	OTT-2100 is communicating with ACU in a Secure Channel session
LED 1	Flashing Blue	OTT-2100 is communicating with ACU in a Unencrypted Communication Session
LED 1	Solid Red	Low battery voltage
LED 2	Flashing Green	FILETRANSFER is in progress
LED 2	Flashing Red	OTT-2100 is waiting to be polled by the ACU
LED 3	Solid Green	File received, device will restart
LED 3	Solid Red	File is corrupt

Overview

The OTT-2100 is put into Cypress SCBK (Secure Channel Base Key) Reset Mode by turning on DIP switches 8, 9, and 10 ON, while DIP switches 1-7 are OFF, and pushing the Power/Mode Switch to the left or right position.

The Cypress SCBK Reset Mode is used to reset the SCBK of supported Cypress products to the default value. The default value can either be the SCBK-D defined in the OSDP spec, or a default SCBK defined by Cypress. The OTT-2100 will attempt to reset the SCBK using Cypress manufacturer specific commands. The Cypress device must be set to PD mode during this process.

OSDP Spec SCBK-D (in HEX): 30 31 32 33 34 35 36 37 38 39 3A 3B 3C 3D 3E 3F

General Instructions

1. Set DIP switches 1-7 OFF, and 8, 9, and 10 ON.
2. Connect OTT-2100 to the Cypress product via the OSDP connection.
3. Turn the Power/Mode switch to either the left or right position to power the OTT-2100 on in Cypress SCBK Reset Mode.
4. LED 1 will be flashing blue while it searches for an OSDP PD (Cypress Product) on the OSDP bus.
5. When the OTT-2100 established communication with the OSDP PD, LED 1 will be flashing green and begin attempting the reset SCBK using Cypress manufacturer specific commands.
6. LED 1, LED 2, and LED 3 will be solid red when the OTT-2100 fails to reset the SCBK.
7. LED 1, LED 2, and LED 3, will be solid green when the OTT-2100 successfully resets the SCBK.

Firmware Update Mode LED Table

LED	LED State	Meaning
LED 1	Flashing Green	OTT-2100 is communicating OSDP PD and attempting to reset the SCBK
LED 1	Flashing Blue	OTT-2100 is searching for an OSDP PD on the OSDP bus
LED 1	Solid Red	Low battery voltage
LED 1, 2, & 3	Solid Green	SCBK success fully reset
LED 1, 2, & 3	Solid Red	Failed to reset SCBK

This section lists and defines in general terms OSDP terminology used in this manual.

Access Control Unit (ACU): Typically the access controller, the ACU is the device on the OSDP bus that controls the PDs. The ACU only sends commands to the PDs and waits for replies.

Peripheral Device (PD): Typically a reader, but many other devices can be PDs, any device on the OSDP bus that is not the ACU. PDs receive commands from the ACU and send replies.

Address: OSDP Peripheral Devices are assigned an address, all PDs on the OSDP bus must have a unique address. This address is used in commands from the ACU and in replies from the PD to indicate which device the message is being sent to/from.

Baud Rate: Data transfer rate, expressed in bits per second.

Secure Channel Base Key (SCBK): 16 byte key set by the user used to initiate Secure Channel communication sessions.

Secure Channel Base Key Default (SCBK-D): Default SCBK value. Default value set by the manufacturer or the default value defined in the OSDP specification.

Secure Channel Session: OSDP communication sessions using the Secure Channel Protocol, which, among other things, encrypts the data payload in OSDP messages.

Unencrypted Communication Session: OSDP communication sessions without data payload encryption.

FILETRANSFER: OSDP protocol used to transfer a file from the ACU to the PD. In the case of the OTT-2100, a firmware file.

NAK: Negative acknowledge reply from the PD. Indicates the PD had an error processing the previous command.

ACK: Positive acknowledge reply from the PD. The PD properly processed the previous command or nothing to report to ACU.

RAW: PD reply with card data payload. Card data is a raw string of bits.

Manufacturer Specific Command: OSDP Command implemented by the manufacturer for special device functions not found in the OSDP spec.