CT-V900 Controller

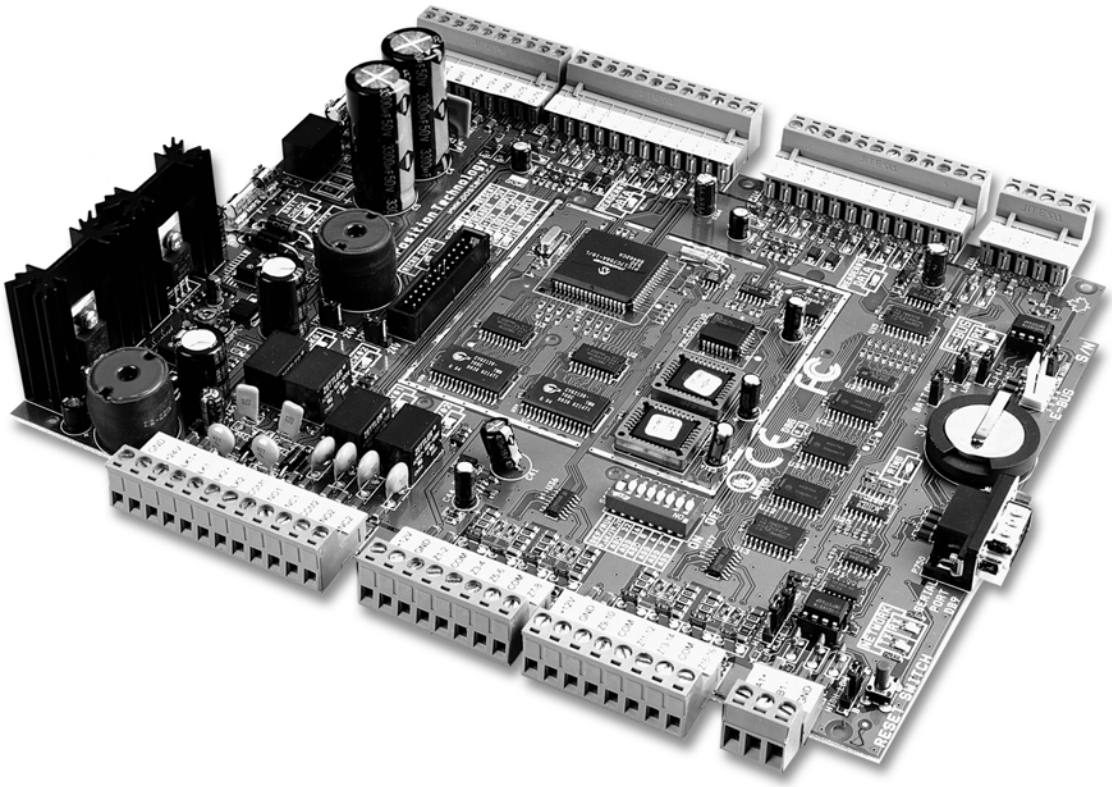

Installation Manual

CDV Americas
ACCESS CONTROL SYSTEM MANUFACTURER

TABLE OF CONTENTS

SYSTEM OVERVIEW . . . 4
System Requirements . . . 4
Power Requirements . . . 4
Operator Computer Requirements for Centaur 2.0 and 3.0 . . . 4
Access Server Computer Requirements for Centaur 3.0 . . . 4
Compatible Readers and Keypads . . . 4
Accessory Modules . . . 4
PosiProx Card Reader (CR-R880) . . . 4
PosiKey Keypad (CK-POSK-0) . . . 4
RS-485 Converter Module (CA-A360) . . . 4
Network Hub (CA-A370) . . . 4
Relay Expansion Module (CA-A460) . . . 5
Elevator Floor Controller (CA-A480) . . . 5
Lock Control Module (CA-A110) . . . 5
Tracker LCD Keypad (CK-TRAK-L) . . . 5

LOCATION & INSTALLATION . . . 6
Contents of CT-V900 Package . . . 6
Location and Mounting . . . 6
Installing a Controller Box Tamper Switch . . . 6
Connecting Earth Ground . . . 7
Power Connections . . . 7
Battery Backup . . . 7
LED Indicators . . . 7
Upon Power Up . . . 7
Battery Indications . . . 7
Jumper Settings . . . 8
BATT ON/OFF . . . 8
EOL (Controller Network) . . . 8
12V/24V (Lock #1) . . . 8
12V/24V (Lock #2) . . . 9
High/Low (Network Impedance) . . . 9
EOL (E-Bus Network) . . . 9
High/Low (E-Bus Impedance) . . . 9
Dip Switch Settings . . . 9
Def/Run Dip Switch . . . 9
9.6K/19.2K Dip Switch . . . 9
Controller Address Assignment . . . 9

ACCESS CONTROL NETWORK . . . 11
Connecting the Access Control Server . . . 11
Access Control System Overview . . . 12

INPUTS AND OUTPUTS . . . 14
Readers and keypads . . . 14
Programmable Outputs . . . 14
Locking Devices . . . 15
Inputs . . . 16
NC Input Connection (8 inputs) . . . 16
ATZ 2R Connection (16 inputs) . . . 16
ATZ 3R Connection (16 inputs) . . . 16
Relays . . . 16

SYSTEM SPECIFICATIONS . . . 17
Recommended Wiring . . . 17
CT-V900 Controller Specifications . . . 17

DIAGRAMS . . . 19
System Diagram . . . 19
Controlled Entry and Exit . . . 20
Controlled Entry With Free Exit . . . 21
Turnstiles . . . 21
Mantrap . . . 22

SYSTEM OVERVIEW

SYSTEM REQUIREMENTS

POWER REQUIREMENTS

- Transformer: 24VAC, 75VA
- Backup Battery: Two 12VDC, 7Ah, gel type batteries

OPERATOR COMPUTER REQUIREMENTS FOR CENTAUR 2.0 AND 3.0

- Pentium 133MHz (Pentium 200MHz or higher recommended)
- Microsoft® Windows® 95/98 or Windows® NT service pack 4.0 or higher
- 32MB RAM (64MB Recommended)
- 200MB free disk space (300 Recommended)
- RS-232 Serial Port
- CD-ROM Drive required for installation
- Super VGA Monitor

ACCESS SERVER COMPUTER REQUIREMENTS FOR CENTAUR 3.0

- Pentium 200MHz (Pentium 300MHz or higher recommended)
- Microsoft® Windows® NT service pack 4.0 or higher
- 64MB RAM (128MB RAM Recommended)
- 300MB free disk space (1GB Recommended)
- RS-232 Serial Port (Depending on the installation, more than one may be required)
- CD-ROM Drive required for installation
- Super VGA Monitor

COMPATIBLE READERS AND KEYPADS

- CR-R880 Series PosiProx Proximity Reader.
- CK-POSK-0 BCD and Wiegand Keypad, CK-K616 / CK-K626 Wiegand Keypads
- Keypads which conform to BCD, Motorola ARK or Wiegand outputs
- Supports bar code, magnetic and proximity readers which conform to the Wiegand standard 26/37 bit output, or Track 2 magnetic card readers with cards that conform to the Track 2 or ABA Track 2 format
- For an up-to-date list of which keypads and readers are supported, refer to the *Centaur 4.0 Software Manual* or visit our web site at www.cdvamericas.com.

ACCESSORY MODULES

POSIPROX CARD READER (CR-R880)

Proximity technology will never be the same again. PosiProx sets exacting new standards in design, reliability, and affordability. With no equal in durability and a read range of up to 4”, the PosiProx and proximity card and tag readers are the undeniable choice for access control applications.

RS-485 CONVERTER MODULE (CA-A360)

The CA-A360 RS485 Converter module is a communication interface that is installed between the managing computer and the first controller of your access control system. Two converters can also be used as a repeater, extending the distance of an RS-232 or RS485 bus by 1220m/4000ft. Transmit, receive and power LEDs provide visual indication of the module’s status.

NETWORK HUB (CA-A370)

The CA-A370 Network Hub allows you to wire an RS-485 network in a star configuration along a new or existing RS-485 network without affecting the performance of the main network or devices connected to it. Using the CA-A370 provides higher network isolation from noise, thus greatly increasing communications reliability. The CA-A370 simplifies installation, and makes running an RS-485 network more cost-effective by reducing wiring and installation time.

RELAY EXPANSION MODULE (CA-A460)

The Model CA-A460 Relay Expansion module provides an additional seven relays to a CT-V900 controller. Up to 2 Plug and Play relay expansion modules can be added to each controller for a total of 16 relays per

controller. The relay expansion modules are connected to the controller via an RS-485 E-bus, allowing you to install the relay modules a maximum distance of 1220m/4000ft. from the controller. The module features an activation status LED for each relay, a communication failure LED with an associated output, a 24-hour tamper input and supply monitoring. Removable terminals are optional.

ELEVATOR FLOOR CONTROLLER (CA-A480)

Connected to the controller's expansion bus, the CA-A480 can control up to 16 floors. Each of the CA-A480 floor control relays can be interfaced directly with an elevator's floor control buttons in 2 modes (Non Destination Controlled and Destination Controlled). When using the Non Destination Controlled Mode and a valid card is presented, the appropriate floor control relays will become enabled allowing the card holder to select the desired floor. The Destination Controlled Mode offers a far superior event trail and user accountability by permitting the card holder to make only one floor selection upon presentation of their card. In this mode an event is logged indicating the selected floor. In addition to these advanced floor and elevator control features, the CA-A480 also features full supervision, backup battery and a fire alarm input.

LOCK CONTROL MODULE (CA-A110)

The CA-A110 Lock Control Module has been designed to greatly reduce installation time and simplify the connection of electromagnetic locks when used alone or in conjunction with door strikes. The CA-A110 Lock Control Module consists of two on-board, heavy duty 12V relays, two inputs for fire alarm contacts and two relay activation LED indicators. The relays, which are used to control power to the electromagnetic locks, are toggled by the activation of the controller’s lock output terminals or the CA-A110’s fire alarm contact inputs.

TRACKER LCD KEYPAD (CK-TRAK-L)

The Tracker LCD Keypad serves as a display unit for your Tracker Time and Attendance Software. The keypad’s buttons do not perform any actions. When an access card is presented to a reader assigned to Tracker, the keypad will display the card number as well as a confirmation of a valid punch in or punch out. When used with Anti-passback applications, the keypad will also display an error if the card user has already punched in or out.

LOCATION & INSTALLATION

CONTENTS OF CT-V900 PACKAGE

When you receive your CT-V900 controller you should find the following items in your package. If you are missing any items, notify your distributor immediately.

- 1 CT-V900 Controller in its cabinet
- EOL resistors for controller inputs (8 X 2.2KΩ and 16 X 1KΩ)
- 2 (8) diodes for the door strikes or locks
- Backup battery lead wires
- CT-V900 cabinet keys
- Tamper switch and metal bracket

LOCATION AND MOUNTING

The cabinet is designed to be installed indoors, in a safe and secure location. Suggested locations include electrical rooms, communication equipment rooms, closets or in the ceiling. To save time and wiring and facilitate testing, install the cabinets at an equal distance between its controlled doors. Normal temperature and humidity levels should be maintained.

- *Cabinet Dimensions:*
  39cm (15.5”) high, 33cm (13”) wide, 10cm (4”) deep
- *The Cabinet Can Accommodate:*
  Two 12V, 7Ah, gel cell type batteries and wiring connections
  15cm (6”) high, 6cm (2.5”) wide, 10cm (4”) deep
- *Multiple Conduit Knock-outs:*
  Two 25mm (1”) or 31mm (1.25”) and one 12mm (0.5”) or 19mm (0.75”) on each side
- *Minimum Clearance For Cabinet:*
  25cm (10”) clear space around all sides
  38cm (15”) clear space in front of cabinet
- *Minimum Clearance From Electrical Interference:*
  2.4m (8ft.) from high voltage equipment or wiring and from electrical equipment likely to generate interference
  1.2m (4ft.) from telephone equipment or lines and 8m (25ft.) from transmitting equipment

INSTALLING A CONTROLLER BOX TAMPER SWITCH

Installing a tamper switch allows the controller to detect when the cabinet door is opened or when the cabinet is removed from the wall. Refer to Figure 1 and install the tamper switch as follows:

STEP 1: Insert the metal bracket in the cabinet slot before installing the cabinet on the wall.
STEP 2: Insert the tamper switch in the metal bracket’s 2cm (0.75”) hole.
STEP 3: Connect two 20cm (8”) wires to the tamper switch terminals.
STEP 4: Connect the tamper switch to the “TMP” terminals on the controller.
STEP 5: If you do not use the tamper switch, connect a wire between the two “TMP” terminals.

***Figure 1*: Tamper Switch Connections**

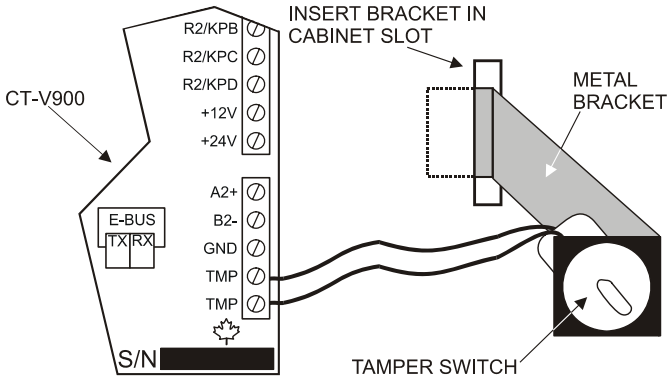

CONNECTING EARTH GROUND

A cold water pipe provides the best earth ground for the system. If a cold water pipe is not available, find another good earth ground. Run an AWG #14 solid copper wire from the controller's EARTH GND terminal (located on top right of controller) to the cold water pipe. Place the ground clamp below any other ground clamps on the same water pipe.

POWER CONNECTIONS

A 15 amp AC power source with a dedicated breaker and an isolated ground is recommended. Connect a 24VAC, 75VA (minimum) transformer to the controller's AC terminals and mount it near the cabinet. Wire two 12VDC, 7Ah, gel type batteries in series and then connect them to the BAT+, BAT- terminals with the battery leads supplied (see "Figure 14" on page 19).

Do not power up the controller until all connections are completed.

BATTERY BACKUP

The controller cannot be started on battery power only. Battery backup time varies with each system. Typical backup time is between 2 and 20 hours using standard equipment and settings. When the battery voltage drops below 20.5V the LOW BAT LED will flash. It will restore at 23.4V. If the battery voltage drops to below 16.8V, the controller will shut down after one minute. The LOW BAT LED will flash twice as fast (strobe) during this one minute period.

LED INDICATORS

For location of LEDs refer to "Figure 2" on page 8.

UPON POWER UP

- The "AC PRESENT" LED should be on.
- The "READER 5 VOLT" LED should be on.
- The "12 VOLT SUPPLY" LED should be on.
- The "LOGIC 5 VOLT" LED should be on.
- The "MICRO CHECK" LED flashes every 750ms in normal operation or every 350ms if communication fails.
- When a **valid** card is presented at either reader, the LED indicator associated with the reader activates for **750ms**.
- When a card is presented to a reader that does not conform to the programmed format, the LED indicator associated with the reader will activate for **100ms**.

If the "micro check", "low bat", "reader 1" and "reader 2" LEDs are flashing in a circular manner, the controller has no firmware and must be updated. The update can be done from the firmware update application which can be downloaded from our web site. For more information refer to the Centaur Operator's Manual or visit our web site at www.postech.ca.

BATTERY INDICATIONS

- During a battery test, the "BATT CHECK" LED should be on for four seconds.
- When there is a complete loss of power (no AC or battery), the "BATT ENABLE" LED should be off.
- When the battery voltage drops below 20.5V the "LOW BATT" LED will flash
- If the battery voltage drops to below 16.8V, the controller will shut down after one minute. The "LOW BATT" LED will flash twice as fast (strobe) during this one minute period.

***Figure 2*: Controller's Jumper Locations**

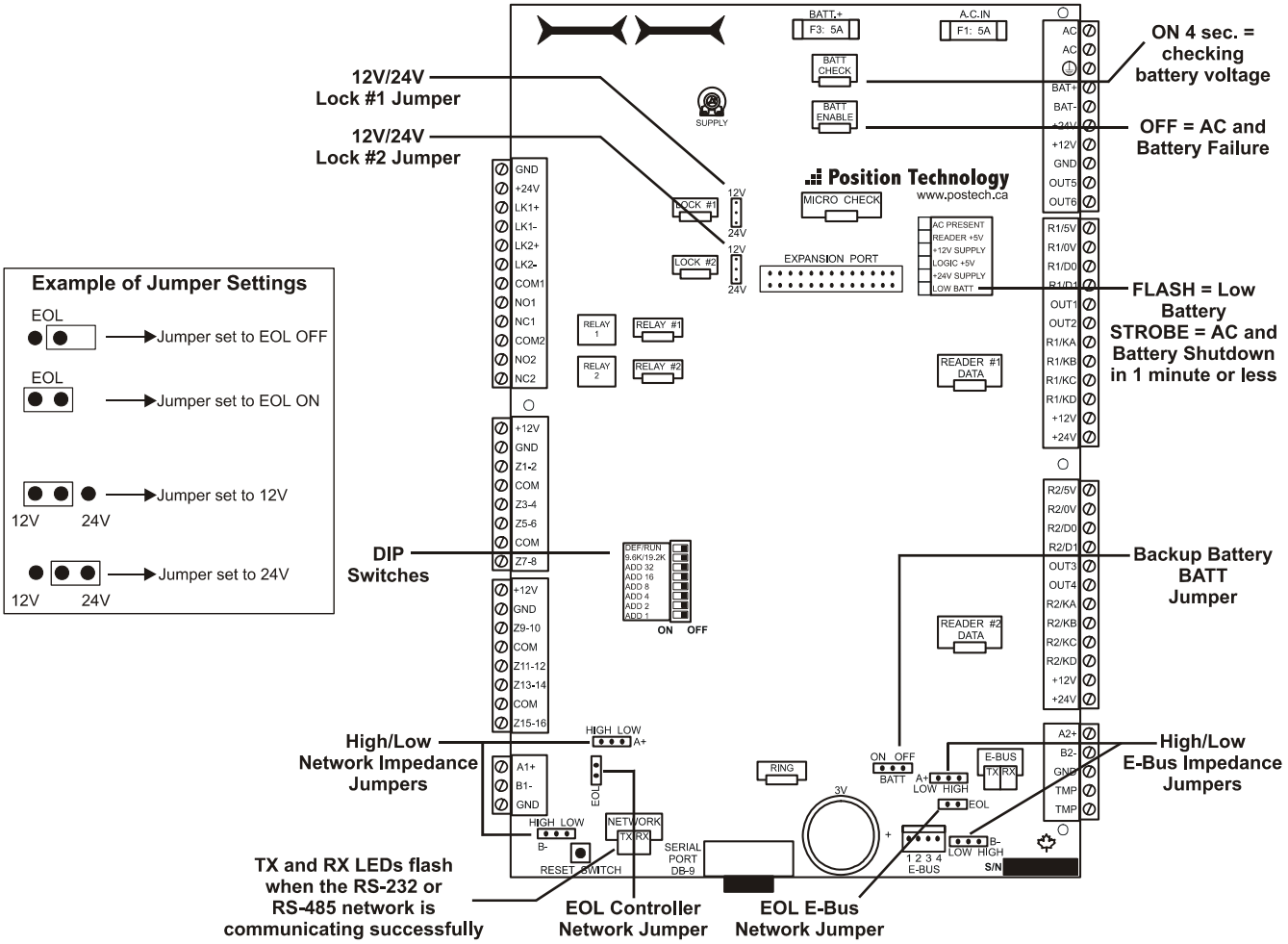

JUMPER SETTINGS

As shown in Figure 2 there are nine jumpers used to set some of the controller's operating modes.

BATT ON/OFF

When the jumper is on, the controller enables the RAM and RTC battery backup (default = off). Once the controller is installed, the jumper must be on for correct operation. If you are required to replace the 3V backup battery, we recommend that you set the jumper to off until the the battery is replaced. Note however, if a complete power loss occurs, the time and date as well as all controller programming will be lost.

EOL (CONTROLLER NETWORK)

Places the EOL termination of the main controller network in circuit (default = off). Jumper should only be on when the controller is the last controller in the network as demonstrated in Figure 3.

***Figure 3*: Sample EOL Jumper Settings**

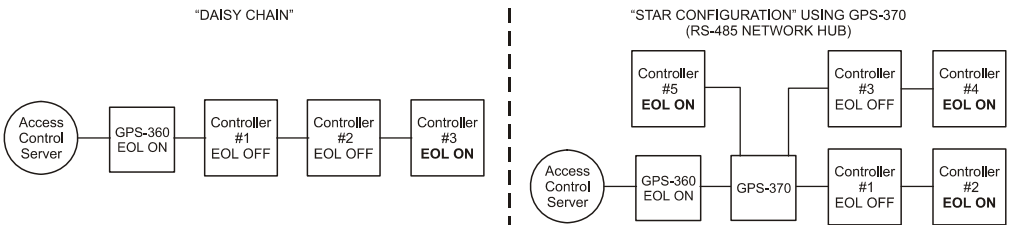

12V/24V (LOCK #1)

Selects the output voltage of the "LK1+" terminal when the Lock#1 relay is active (default = 12V). When the jumper is on pins 1 & 2 the output will be 12V. If the jumper is on pins 2 & 3 the output will be 24V.

12V/24V (Lock #2)

Selects the output voltage of the “LK2+” terminal when the Lock#2 relay is active (default = 12V). When the jumper is on pins 1 & 2 the output will be 12V. If the jumper is on pins 2 & 3 the output will be 24V.

High/Low (Network Impedance)

Select the impedance of the RS-485 network (default = high). Set both jumpers to high when running normally. When running the Centaur Lite edition and connecting directly to the 9-pin serial port, you must set both jumpers to low.

EOL (E-Bus Network)

Places the EOL termination of the controller’s E-bus network in circuit (default = on). If the controller is at the end of the E-Bus network, the jumper should be on. If the controller is in the middle of the E-Bus network, the jumper must be off. Please refer to Figure 4.

***Figure 4*: Sample E-Bus EOL Jumper Settings**

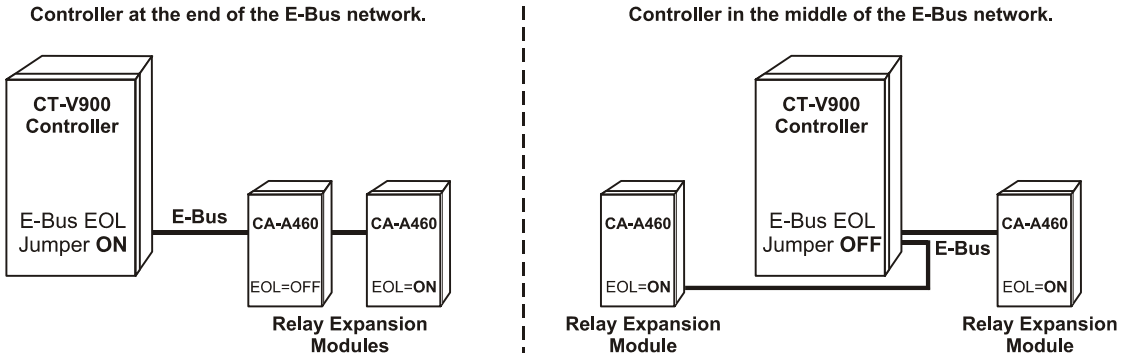

High/Low (E-Bus Impedance)

Select the impedance of the E-bus for the RS-485 (default: low). Set to low when running normally. Set to high when running special E-Bus devices.

DIP SWITCH SETTINGS

As shown in “Figure 2” on page 8, a set of eight dip switches can found on the lower left hand side of the controller. These dip switches are used to set certain modes in the controller as described below. Changes to the dip switch settings will only be applied when the controller is powered up or if you press the “Reset Switch” located on the lower left hand side of the controller.

Def/Run Dip Switch

Set the dip switch to the off (Run) position for normal operation. If you wish to reset the controller to its default settings, set the dip switch to the on (Def) position, then power up the controller or press the “Reset Switch” on the lower left hand side of the controller. Default setting is off (Run).

9.6K/19.2K Dip Switch

Select the appropriate communications baud rate between the access control server and the network of controllers. Set the dip switch to the on position for 9.6K or set the dip switch to the off position for 19.2K. Default setting is off (19.2K). Verify that the CA-A360 Converter has also been set accordingly.

Controller Address Assignment

Each site can manage up to 256 controllers. The 256 controllers are divided into four controller loops of up to 64 controllers each. Using “Table 1” on page 10, set the dip switches to the desired controller address. Each of these loops is assigned to a specific COM port. Controllers connected to the selected COM port will be assigned to a specific address. The access control server (Centaur Software) will recognize these dip switch settings. For more detailed information, please refer to the Centaur Software Manual.

***Table 1**: Assigning Controller Addresses Via Dip Switches*

Cont. Add.	Dip Switches						Cont. Add.	Dip Switches						Cont. Add.	Dip Switches					
	1	2	4	8	16	32		1	2	4	8	16	32		1	2	4	8	16	32
1	OFF	OFF	OFF	OFF	OFF	OFF	23	OFF	**ON**	**ON**	OFF	**ON**	OFF	45	OFF	OFF	**ON**	**ON**	OFF	**ON**
2	**ON**	OFF	OFF	OFF	OFF	OFF	24	**ON**	**ON**	**ON**	OFF	**ON**	OFF	46	**ON**	OFF	**ON**	**ON**	OFF	**ON**
3	OFF	**ON**	OFF	OFF	OFF	OFF	25	OFF	OFF	OFF	**ON**	**ON**	OFF	47	OFF	**ON**	**ON**	**ON**	OFF	**ON**
4	**ON**	**ON**	OFF	OFF	OFF	OFF	26	**ON**	OFF	OFF	**ON**	**ON**	OFF	48	**ON**	**ON**	**ON**	**ON**	OFF	**ON**
5	OFF	OFF	**ON**	OFF	OFF	OFF	27	OFF	**ON**	OFF	**ON**	**ON**	OFF	49	OFF	OFF	OFF	OFF	**ON**	**ON**
6	**ON**	OFF	**ON**	OFF	OFF	OFF	28	**ON**	**ON**	OFF	**ON**	**ON**	OFF	50	**ON**	OFF	OFF	OFF	**ON**	**ON**
7	OFF	**ON**	**ON**	OFF	OFF	OFF	29	OFF	OFF	**ON**	**ON**	**ON**	OFF	51	OFF	**ON**	OFF	OFF	**ON**	**ON**
8	**ON**	**ON**	**ON**	OFF	OFF	OFF	30	**ON**	OFF	**ON**	**ON**	**ON**	OFF	52	**ON**	**ON**	OFF	OFF	**ON**	**ON**
9	OFF	OFF	OFF	**ON**	OFF	OFF	31	OFF	**ON**	**ON**	**ON**	**ON**	OFF	53	OFF	OFF	**ON**	OFF	**ON**	**ON**
10	**ON**	OFF	OFF	**ON**	OFF	OFF	32	**ON**	**ON**	**ON**	**ON**	**ON**	OFF	54	**ON**	OFF	**ON**	OFF	**ON**	**ON**
11	OFF	**ON**	OFF	**ON**	OFF	OFF	33	OFF	OFF	OFF	OFF	OFF	**ON**	55	OFF	**ON**	**ON**	OFF	**ON**	**ON**
12	**ON**	**ON**	OFF	**ON**	OFF	OFF	34	**ON**	OFF	OFF	OFF	OFF	**ON**	56	**ON**	**ON**	**ON**	OFF	**ON**	**ON**
13	OFF	OFF	**ON**	**ON**	OFF	OFF	35	OFF	**ON**	OFF	OFF	OFF	**ON**	57	OFF	OFF	OFF	**ON**	**ON**	**ON**
14	**ON**	OFF	**ON**	**ON**	OFF	OFF	36	**ON**	**ON**	OFF	OFF	OFF	**ON**	58	**ON**	OFF	OFF	**ON**	**ON**	**ON**
15	OFF	**ON**	**ON**	**ON**	OFF	OFF	37	OFF	OFF	**ON**	OFF	OFF	**ON**	59	OFF	**ON**	OFF	**ON**	**ON**	**ON**
16	**ON**	**ON**	**ON**	**ON**	OFF	OFF	38	**ON**	OFF	**ON**	OFF	OFF	**ON**	60	**ON**	**ON**	OFF	**ON**	**ON**	**ON**
17	OFF	OFF	OFF	OFF	**ON**	OFF	39	OFF	**ON**	**ON**	OFF	OFF	**ON**	61	OFF	OFF	**ON**	**ON**	**ON**	**ON**
18	**ON**	OFF	OFF	OFF	**ON**	OFF	40	**ON**	**ON**	**ON**	OFF	OFF	**ON**	62	**ON**	OFF	**ON**	**ON**	**ON**	**ON**
19	OFF	**ON**	OFF	OFF	**ON**	OFF	41	OFF	OFF	OFF	**ON**	OFF	**ON**	63	OFF	**ON**	**ON**	**ON**	**ON**	**ON**
20	**ON**	**ON**	OFF	OFF	**ON**	OFF	42	**ON**	OFF	OFF	**ON**	OFF	**ON**	64	**ON**	**ON**	**ON**	**ON**	**ON**	**ON**
21	OFF	OFF	**ON**	OFF	**ON**	OFF	43	OFF	**ON**	OFF	**ON**	OFF	**ON**							
22	**ON**	OFF	**ON**	OFF	**ON**	OFF	44	**ON**	**ON**	OFF	**ON**	OFF	**ON**							

CONNECTING THE ACCESS CONTROL SERVER

There are two ways of connecting the controller network to the access control server. If the access control server is located more than 25 feet from the first controller, you will be required to use the CA-360 converter as shown in Figure 5. If the access control server is located less than 25 feet from the first controller, you can connect the access control server directly to the controller's RS-232 port as shown in Figure 6. The controller then performs the conversion of RS-232 to RS-485 internally.

Figure 5*: *Connecting to the Access Control Server via RS-485

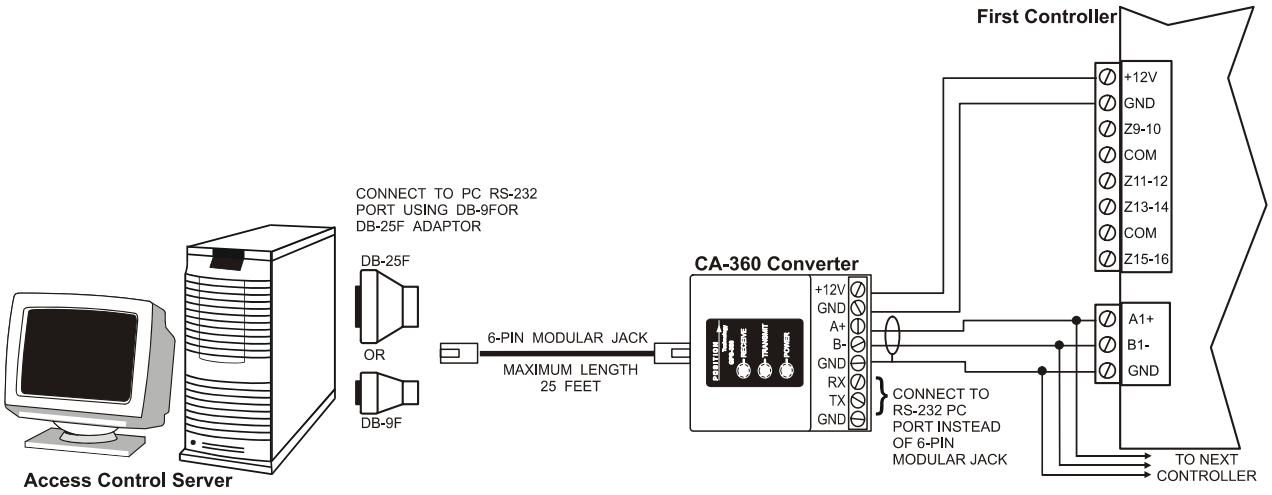

Figure 6*: *Connecting to the Access Control Server via RS-282

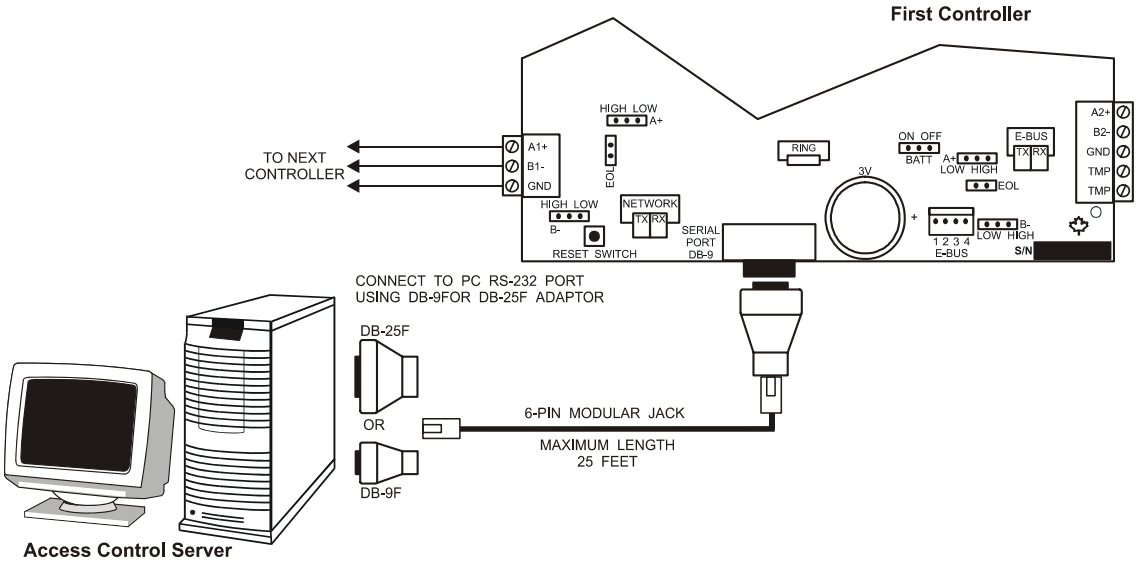

Figure 7*: *Connecting a Centaur Software Key

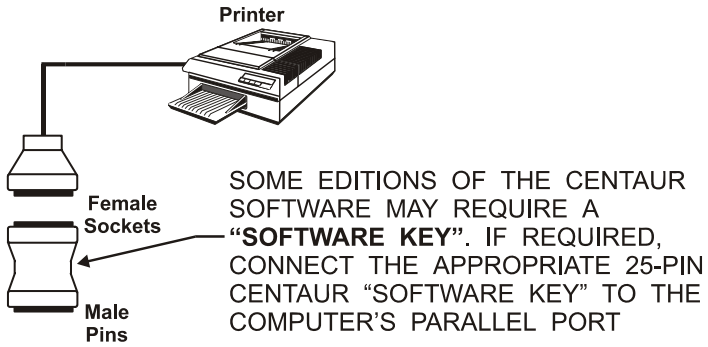

For an overview of the access control system using Centaur 2.0, refer to “Figure 8” on page 12. For an overview of the access control system using Centaur 3.0, refer to “Figure 9” on page 13. Please take note of the following items concerning the connection of the controller network to the access control server:

- **Centaur 2.0:** Up to 16 controllers can be connected to the access control server to control a total of 32 readers. **Centaur 4.0:** Up to 256 controllers can be connected to the access control server to control a total of 512 readers (expandable to 2048 readers).
- Controllers are connected in “daisy chain” format or can be connected in a “star network” when using the CA-A370 Network Hub. “Y” networks cannot be used when connecting the RS-485 communications bus between controllers.
- The controller addresses assigned by the dip switches on each controller (see page 9) do not have to correspond to the actual order of controller placement along the RS-485 network. However, we recommend that this is done to facilitate trouble shooting and installation service.
- Connect the A+, B- and GND of the first controller to the A1+, B1- and GND of the second controller using Belden 1227A type cable. Repeat from the second controller to the third and so forth to a maximum of 1220m (4000 ft.).
- Depending on the location of a controller it may be required to place the Controller Network EOL jumper on. For more information refer to “EOL (Controller Network)” on page 8.
- To change the communication speed:
  - stop communications in the CENTAUR software
  - change the baud rate in the software
  - change the dip switch settings on all controllers
  - press the reset button on each board
  - if using the CA-A360 Converter, change the baud rate jumper (J5) to on
  - start communications

Figure 8*: *Overview of Access Control System Using Centaur 2.0

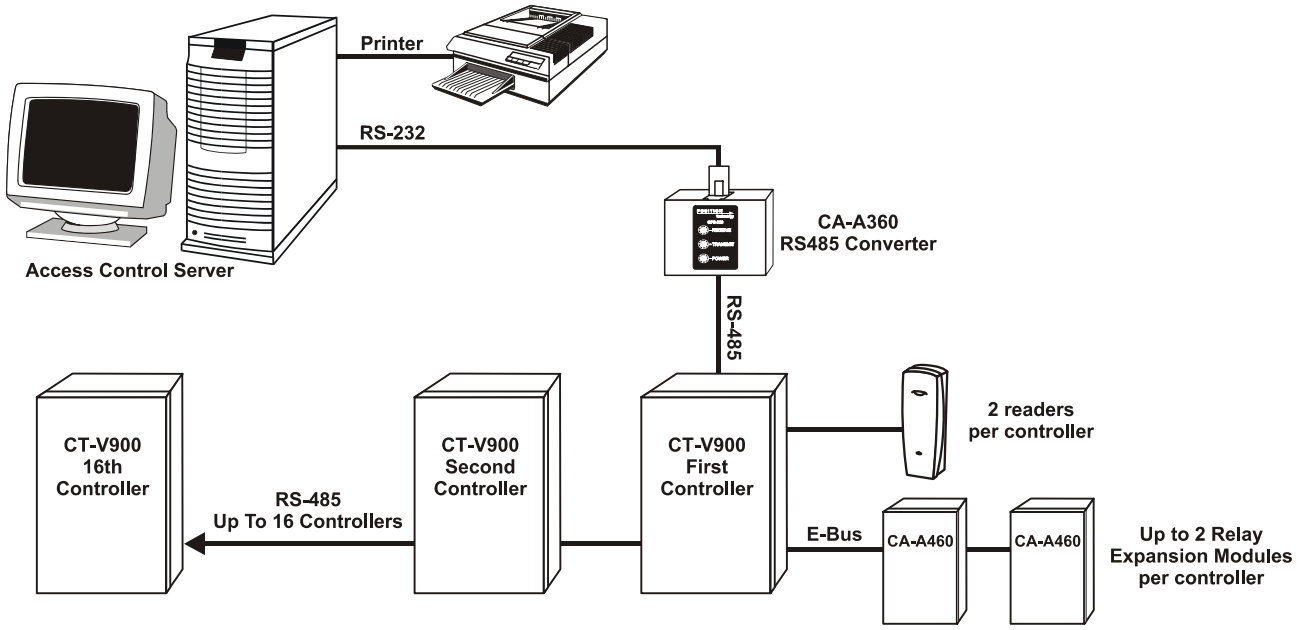

Figure 9: Overview of Access Control System Using Centaur 4.0

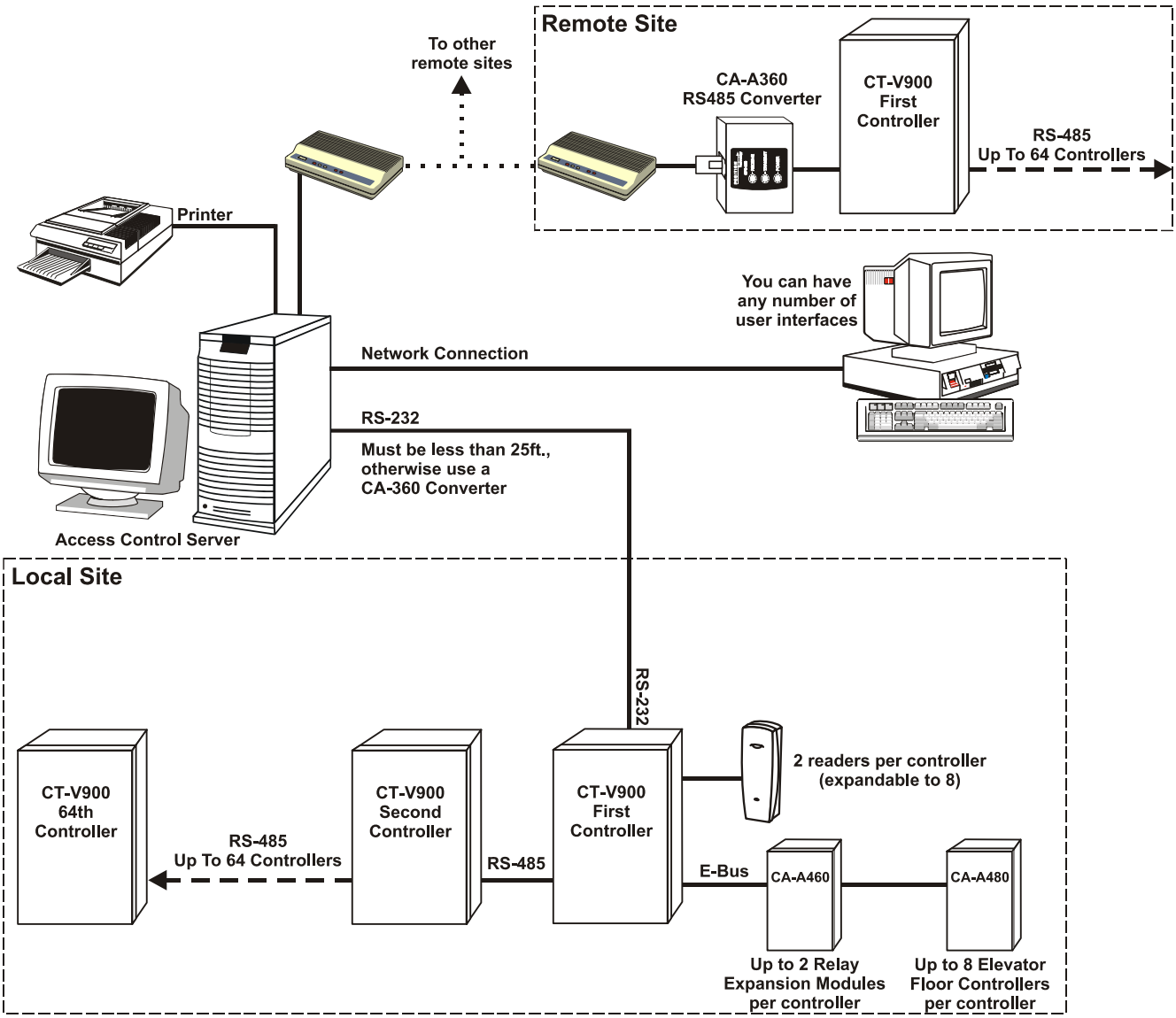

READERS AND KEYPADS

Each CT-V900 controller supports up to two readers and two keypads. With some configurations this can be expanded to a maximum of four readers and four keypads. If you are using the Anti-Passback mode, you will be limited to two controlled doors or one entry/exit door. Most Wiegand keypads and readers are connected as shown below. When installing a keypad with a Wiegand output, the keypad's "D0" and "D1" wires should be connected to the same terminals as the reader's (the reader output must be open collector). Depending on the required application more than one keypad and/or reader can be connected to the same terminals.

***Figure 10*: Reader and Keypad Connections**

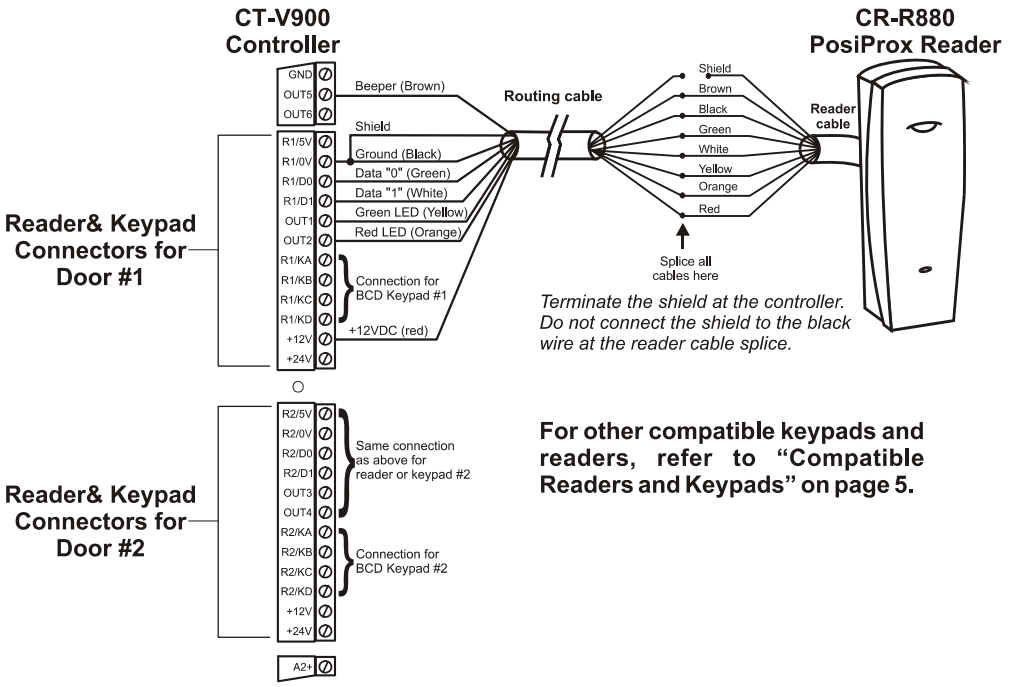

Below you will find examples of the many door configurations that are possible. For details and drawings of some of these example refer to "Diagrams" on page 19.

- Controlled entry with free exit (request for exit via detector or button)
- Keypad only entry with free exit
- Controlled entry and exit by using 2 readers per door (no entry or exit registration)
- Controlled entry and exit by using 2 readers and 2 keypads per door (no entry or exit registration)
- Reader entry with keypad exit (single or multiple codes)
- Controlled entry and exit with Anti-Passback and registration of entry and exit (uses 2 reader ports and 2 doors)

Using the wrong voltage may damage your reader or keypad and invalidate the controller warranty.

PROGRAMMABLE OUTPUTS

Most readers and keypads have built-in buzzers and LEDs. These should be connected to controller's programmable outputs (OUT1 to OUT6) as shown in Figure 10. These are open collector outputs capable of sinking 25mA with a 10Ω limiting resistor. For information on how to program the outputs, please refer to the *Centaur Operator's Manual*. The default settings are as follows:

- Output 1 - Access Granted Door 1
- Output 2 - Access Granted Door 1
- Output 3 - Access Granted Door 2
- Output 4 - Access Granted Door 2
- Output 5 - Waiting for Keypad Door 1
- Output 6 - Waiting for Keypad Door 2

Typically, a red/green indicator on the reader will inform the card user that access has been granted (changes from

red to green), access has been denied (flashing red), or the door is locked (solid red). Typically, the reader buzzer or an external sounding device will inform the card user that the door has been left open after a valid access or the door has been forced open. The functions of all these outputs are programmable through the Centaur software.

LOCKING DEVICES

Each controller has two lock outputs and each of these outputs is associated to a reader input. Using the lock output jumpers you can set each lock output to provide 12VDC or 24VDC (see “Jumper Settings” on page 8). A lock output voltage of 24VDC is recommended for most locking devices. Lock outputs are protected by fuseless technology and will shutdown if the current exceeds 800mA @ 12/24VDC.

- If you have one door with a reader on each side of the door, you can use either lock output.
- You can program the lock outputs to function in “fail-safe” (remove power to unlock a door) or “fail-secure” mode (power required to unlock a door).
- When using Electronic Mag Clamps or similar devices ensure that the current specifications are not exceeded.
- When interconnection to a fire alarm system is required, we recommend the CA-A110 Lock Control Module. This module can be used to cut power to the locks during a fire alarm. Refer to the module’s installation instructions for connection of the CA-A110 device.

Always consult the regulatory agency in your area for existing regulations regarding doors designated as emergency exits.

***Figure 11*: Connecting Locking Devices**

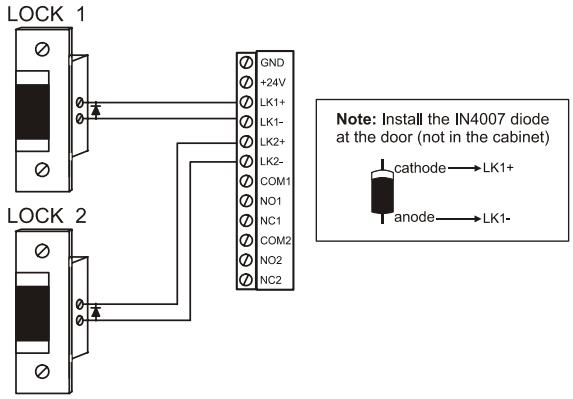

***Figure 12*: Connecting Locking Devices using CA-A110 Lock Control Module**

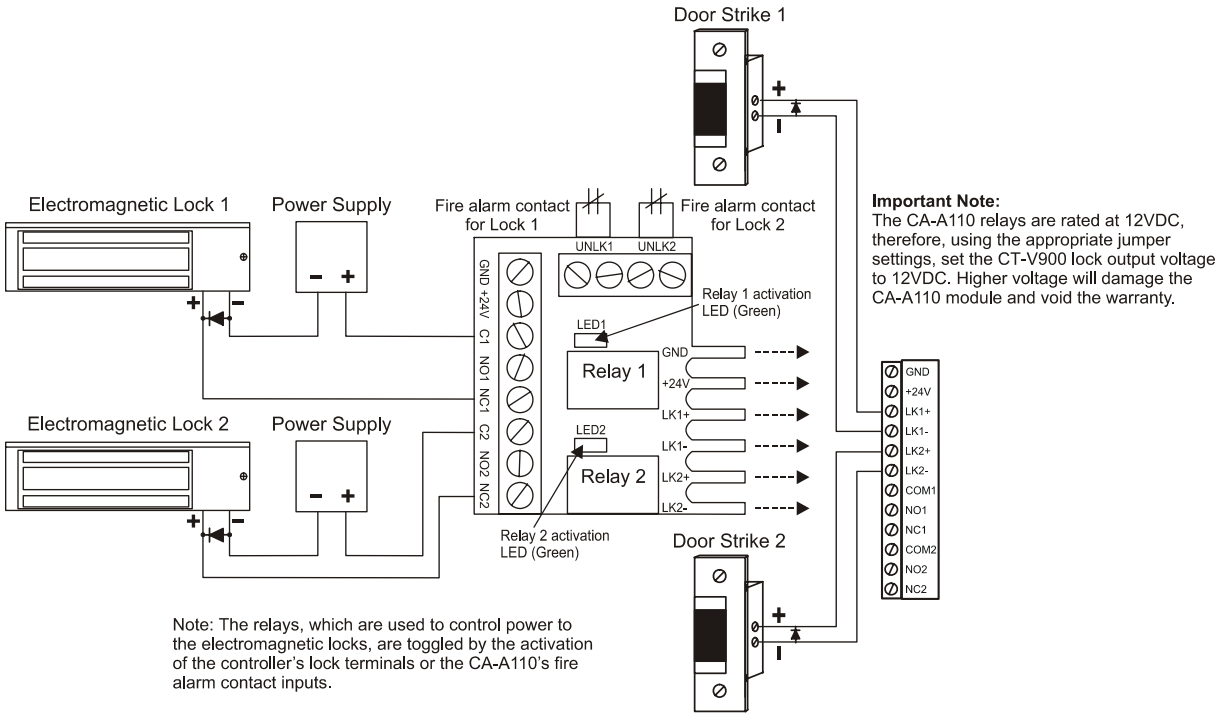

INPUTS

Each controller can monitor the state of up to 16 inputs such as magnetic contacts, motion detectors, temperature sensors or other devices. The following are examples of the type of inputs that can be monitored:

Magnetic Door Contact: Permits supervision of door "status" (opened, closed, opened too long, forced open). Inputs 1 and 9 are assigned by default as the door contact of doors 1 and 2 respectively. When using defaults, you can easily swap terminals when troubleshooting.

Request for Exit (REX): The device used can be a push button, vertical-view motion detector or floor mat sensor. The door can then be programmed to unlock on a REX detection. Not required if there is a reader/keypad on both sides of the door. When a magnetic door contact is installed, the system can differentiate between a door forced open and an authorized exit. Inputs 2 and 10 (3 and 11 for NC Input Connection above) are, by default, assigned to REX of doors 1 and 2 respectively.

Inputs can be installed to a maximum distance of 1000m (3300ft.) from the controller when using AWG #22. Only one of the following input connections can be used per controller (see Figure 13).

NC Input Connection (8 inputs)

When using this method, only one device can be connected to each input for a total of eight input devices. All inputs on the selected controller must be connected using the NC Input Connection Method described in Figure 13. This setup will not support tamper and wire fault (short circuit) recognition, but will generate an alarm condition when the state of the input is breached. Only odd numbered inputs (1, 3, 5...) need to be programmed.

ATZ 2R Connection (16 inputs)

This method allows you to connect two devices to each controller input for a total of 16 input devices. All inputs on the selected controller must be connected using the ATZ 2R Input Connection Method described in Figure 13. This setup will not support wire fault (short circuit) recognition, but will generate an alarm condition when the state of the input or its tamper switch is breached. Since an EOL resistor is not installed in this configuration, if the line is cut, a tamper alarm will be generated.

ATZ 3R Connection (16 inputs)

This method allows you to connect two devices to each controller input for a total of 16 input devices. All inputs on the selected controller must be connected using the ATZ 3R Input Connection Method described in Figure 13. This setup will generate an alarm condition when the state of the input or its tamper switch is breached. An alarm condition will also be generated when a wire fault (short circuit) occurs.

***Figure 13*: Input Connection Methods**

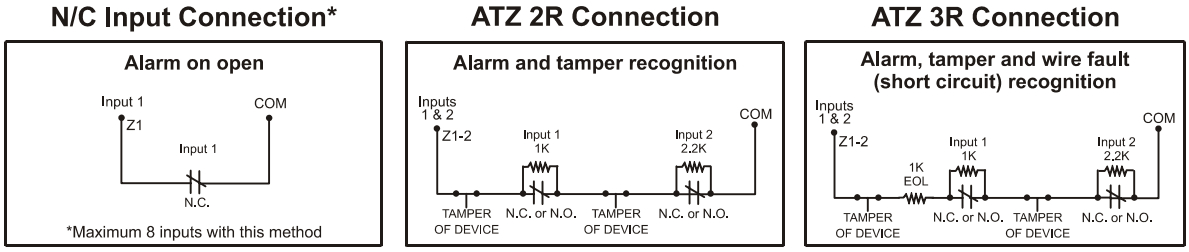

RELAYS

Each controller has two 30VDC, 110VAC, 5A resistive form "C" relays with a "normally open" and a "normally closed" contact. These relays can be used to activate alarm sounders or other devices such as lighting control, air conditioning. An additional 14 relays can be added per controller by connecting two CA-A460 Relay Expansion modules to the controller's E-Bus. The relays can be programmed to activate or deactivate according to a schedule, input or event.

SYSTEM SPECIFICATIONS

RECOMMENDED WIRING

Equipment	Wire Type	Belden Ref. #	Size	Max. Length
Card Reader (1 LED)	6 conductor, stranded, shielded (foil), drain conductor	9553	18AWG	150m (500ft.)
Card Reader (1 LED & Buzzer)	6 conductor, stranded, shielded (foil), drain conductor	9553	18AWG	150m (500ft.)
Card Reader (2 LEDs & Buzzer)	8 conductor, stranded, shielded (foil), drain conductor	9554	18AWG	150m (500ft.)
BCD Keypad	12 conductor, stranded	8466	18AWG	150m (500ft.)
Wiegand Keypad	6 conductor, stranded, shielded (foil), drain conductor	9553	18AWG	150m (500ft.)
Zone Input	4 conductor, Copper	9794	22AWG	600m (2000ft.)
Door Strike	2 conductor, solid Copper	9571	18AWG	150m (500ft.)
AC Transformer for controller	2 conductor, solid Copper	9571	18AWG	8m (25ft.)
RS-485 bus	Ethernet Grade 3, blue jacket, 2 pairs	1227A	24AWG	1220m (4000ft.)

CT-V900 CONTROLLER SPECIFICATIONS

System Resources

Doors:	2 (expandable to 8)
Cards:	10,920 (expandable)
Schedules:	512 (expandable)
Buffered Events:	2048 (expandable)
Operating Temperature:	5°C to 55°C (41°F to 133°F)
System Autonomy:	Full Distributed Architecture (100% Off-line Operation)
Firmware:	Online Upgradeable
Cabinet (Custom Printable):	H: 39cm (15.5"), W: 33cm (13"), D: 10cm (4")

Elevator Control (Centaur 3.0 only)

Controlled Elevators:	2
Floors per Elevator:	64
Schedules per Floor per Elevator:	Yes
Floor Groups:	128

Inputs

Readers:	2 Wiegand or Track 2 Magnetic Swipe Card Readers
Keypads:	2 Wiegand and/or BCD Keypads
Multi-Purpose Inputs:	8 using N.C. or 16 using ATZ with 2R/3R
Controller Tamper:	Normally Closed (N.C.) contact

Communication

Ports:	2 (expandable)
RS-232 Support:	Network (Lite Edition) or Modem Connection
Controller Network:	RS-485 @ 9.6K baud/19.2K baud, Ethernet 10 BASE T, Fiber-Optic Interface Support and RS-232
Expansion Bus (E-Bus):	RS-485, Plug and Play
Max. Distance (E-Bus):	1220m (4000ft.)

Power Supply

AC Power:	24VAC, 75VA
Frequency:	50Hz/60Hz
Max. Current:	2.5A
AC Loss Indicator:	Yes

On-Board Protection

24VDC:	2.5A Fuseless Protection
12VDC:	1A Fuseless Protection
5VDC:	1A Fuseless Protection
AC Protection:	5A Fuse
Battery Reversal Protection:	7A Fuse
Fuse Failure Indication:	Event Generation and LED Display on ALL supplies

Battery Backup

Battery Capacity:	Two 12VDC, 7Ah
Low Battery @:	20.5VDC
Low Battery Restore @:	23.4VDC
Low Battery Cut-Off @:	16.8VDC

Outputs

Lock Outputs:	2 Outputs: 350mA @12/24VDC
Relays:	2 Form "C" Relays: 5A 30VDC Resistive (Expandable to 16 with CA-A460)
Programmable Outputs:	6 Open Collector 25mA Sink

- Distributed Architecture (100% off-line operation)
- Dynamic Memory Adjustment
- E-Bus for Plug and Play expansion modules
- On-Line Upgradable Firmware
- Multiple Reader Technology
- Local Anti-passback
- Operates with all Centaur Software Applications
- Ethernet or Network Ready
- Supports elevator control
- RS-232 and RS-485 support

Output	Volts DC	Typical Current (mA)	Maximum Current (mA)	Combined Maximum Current
Lock Output 1	+12	350	800	24VDC = 1.3A 12VDC = 1.0A 5VDC = 180mA
	+24	350	800	
Lock Output 2	+12	350	800	
	+24	350	800	
Reader 1	+5	80	180	
	+12	120	1000	
	+24	250	1300	
Reader 2	+5	80	180	
	+12	120	1000	
	+24	250	1300	
Auxiliary	+5	50	180	
	+12	200	1000	
	+24	250	1300	

SYSTEM DIAGRAM

***Figure 14*: Overview of Controller Connections**

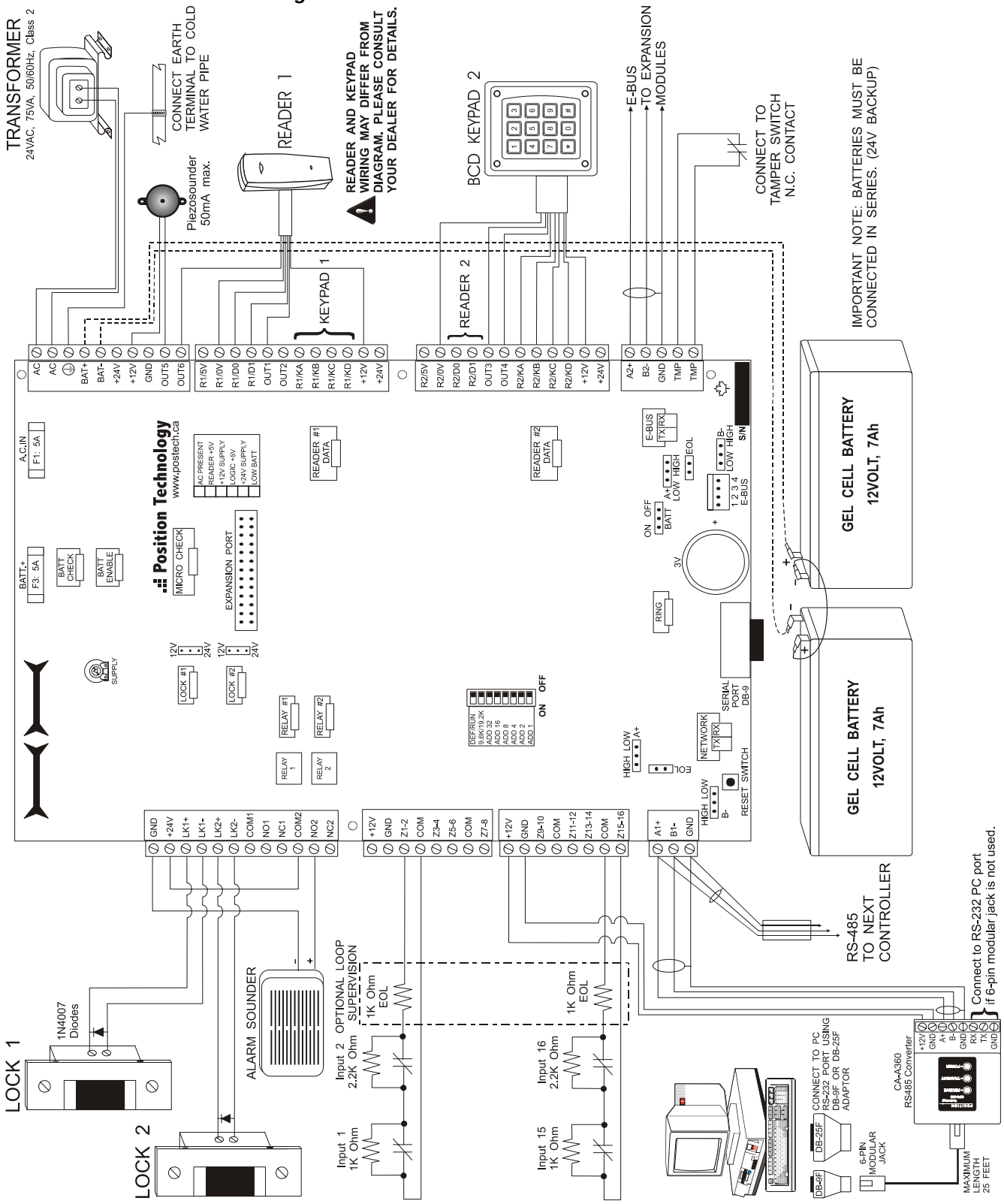

Reader 1 can be assigned as “Entry” and reader 2 as “Exit”, or vice versa. The status of the door is monitored by installing a magnetic door contact (reed switch). Separate wire runs must be installed for each card reader, door contact and door locking device. With this configuration, a card and/or keypad access code will be required to enter and exit the protected area.

***Figure 15*: Controlled Entry and Exit**

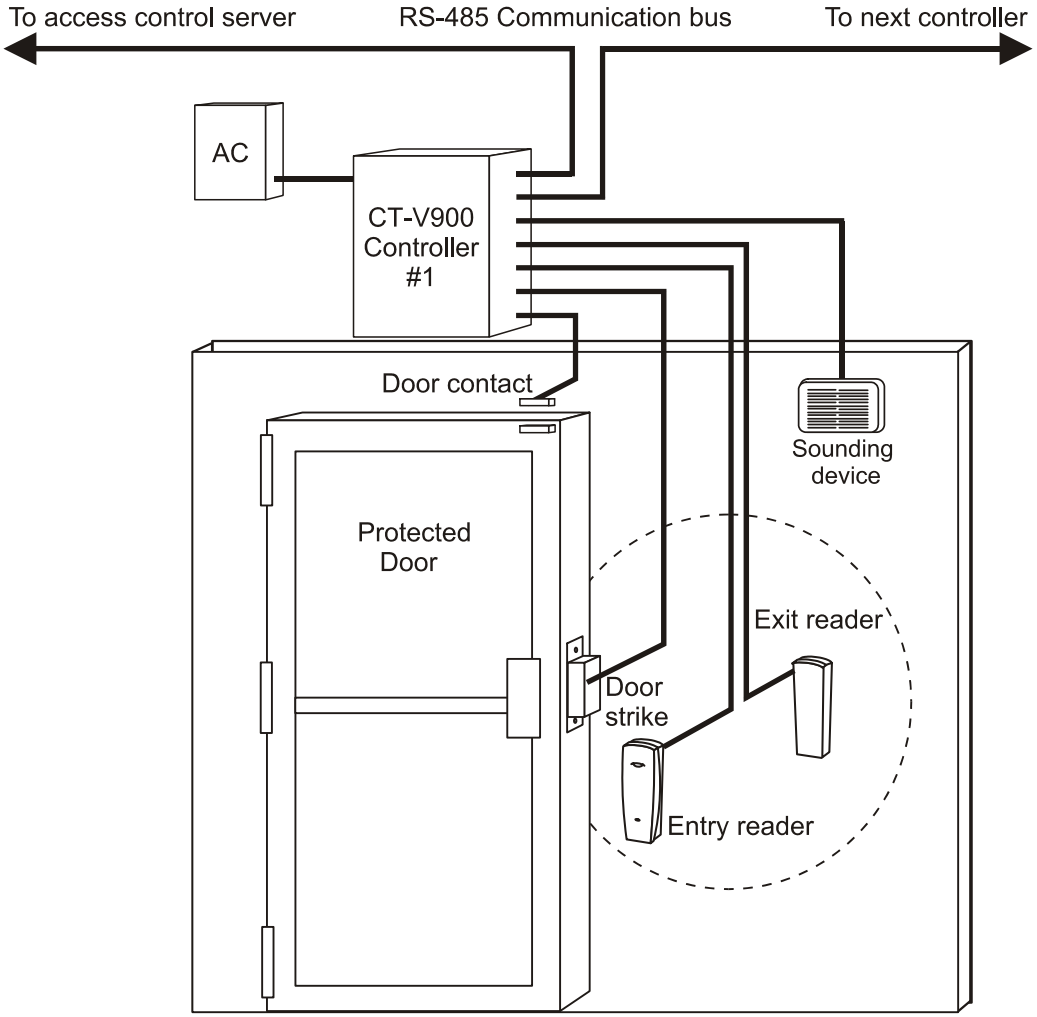

CONTROLLED ENTRY WITH FREE EXIT

Entry through two doors can be controlled with one controller by installing a reader/keypad on one side of each door. If the door status is monitored by a door contact (reed switch) then a “request to exit” (REX) device such as a motion detector, push button or floor mat sensor must be used so that the system can differentiate between a door forced open and an authorized exit. The REX can be programmed for free exit according to a specific schedule, otherwise a “door forced open” event will be generated.

***Figure 16*: Controlled Entry With Free Exit**

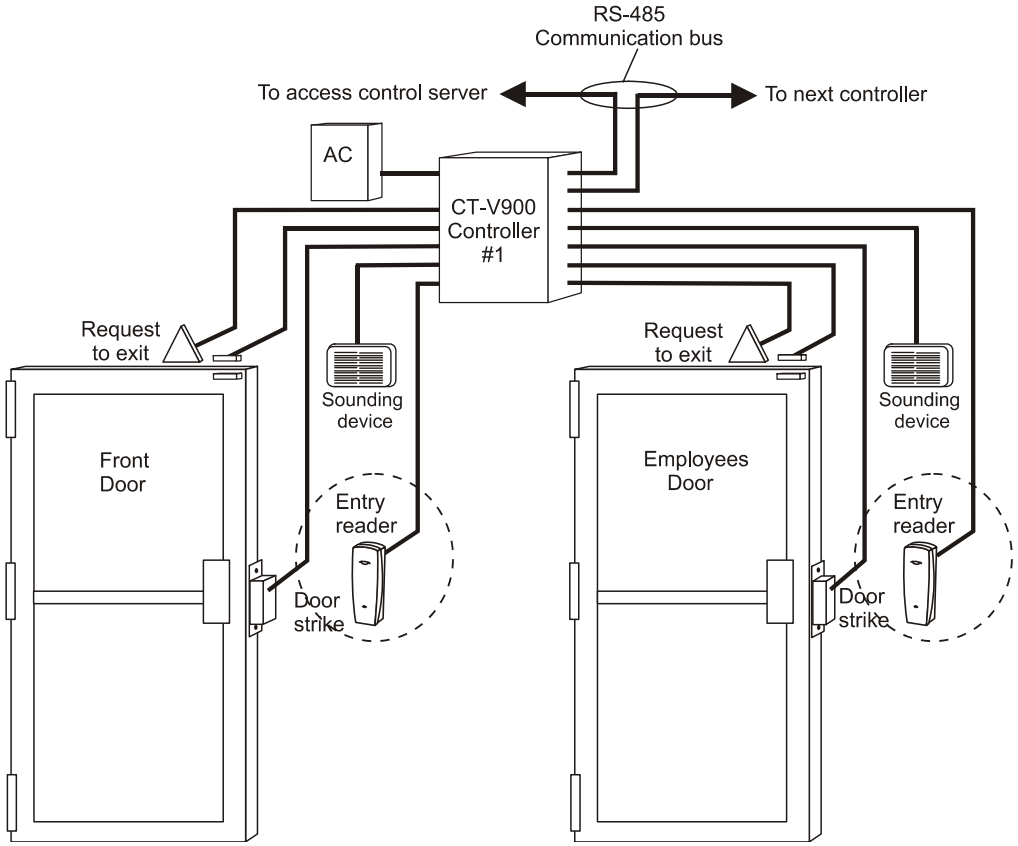

TURNSTILES

Most types of turnstile equipment on the market are controlled by an unlock control input which is connected to a solenoid. The installation may require additional relays or the use of a CA-A110 Lock Control Module.

***Figure 17*: Turnstile Configuration**

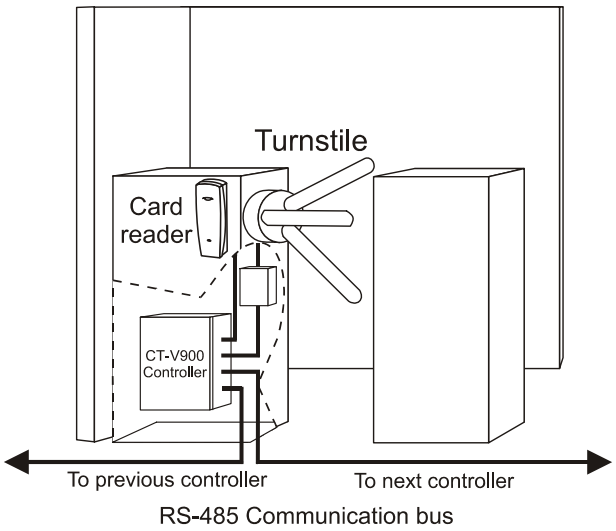

This door configuration is used mostly for high security rooms. A mantrap consists of two or more doors, each controlled by a card reader and/or keypad. When a door is opened upon valid access, it is not possible to open the second door, even with a valid card and/or pin number, until both doors are closed. Most of these applications will use a “request to exit” device to exit the protected area (not shown in illustration).

***Figure 18*: Mantrap Configuration**

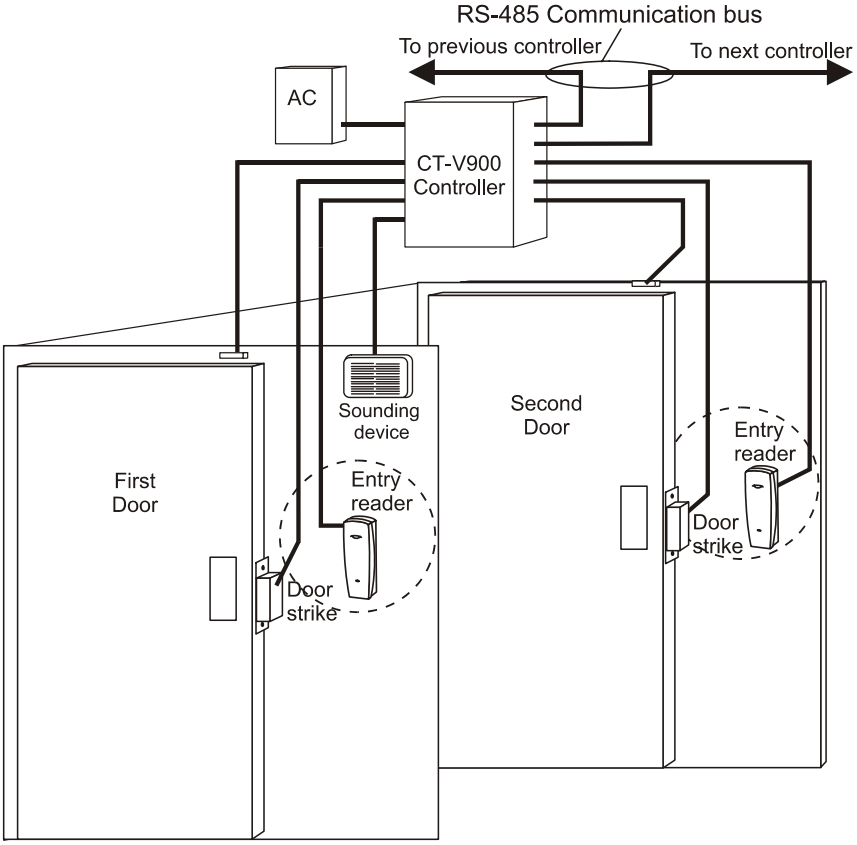

WARRANTY

The Seller warrants its products to be free from defects in materials and workmanship under normal use for a period of one year. Except as specifically stated herein, all express or implied warranties whatsoever, statutory or otherwise, including without limitation, any implied warranty of merchantability and fitness for a particular purpose, are expressly excluded. Because Seller does not install or connect the products and because the products may be used in conjunction with products not manufactured by Seller. Seller cannot guarantee the performance of the security system. Seller obligation and liability under this warranty is expressly limited to repairing or replacing, at Seller's option, any product not meeting the specifications. In no event shall the Seller be liable to the buyer or any other person for any loss or damages whether direct or indirect or consequential or incidental, including without limitation, any damages for lost profits stolen goods, or claims by any other party, caused by defective goods or otherwise arising from the improper, incorrect or otherwise faulty installation or use of the merchandise sold.

CDV Americas
ACCESS CONTROL SYSTEM MANUFACTURER
1645A Autoroute Laval West
(Quebec) H7L 3W3 CANADA
Tel.: (450) 682-7945
Fax: (450) 682-9590