NC Series Conventional Fire Alarm Control Panel Quick Installation Guide

Figure 1: Zone and device connections

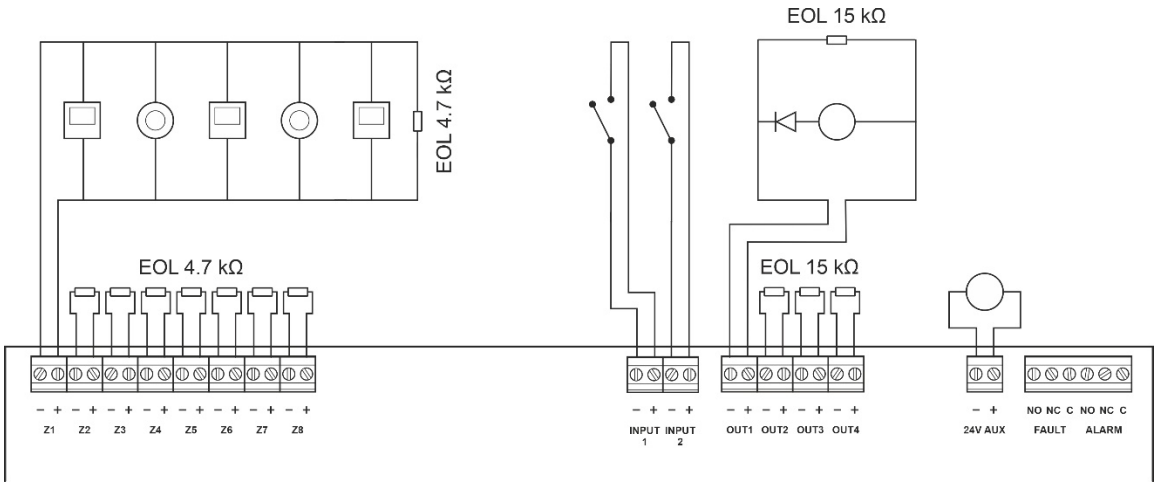

Overview

This document provides quick installation information for your NC Series Conventional Fire Alarm Control Panel.

For detailed installation information, including EN 54-13, intrinsically safe, and BS 5839-1 operating mode requirements, see the installation manual.

Zones and zone devices

Connect zone wires and devices as shown in Figure 1.

Line resistance

Mixed zones	40 Ω max.
Automatic / manual zones	55 Ω max.

Detectors and manual call points per zone

Detectors [1]	
NC Series	32 max.
Aritech 700 Series	20 max. [2]
Kilsen KL700 Series	20 max. [2]
Ziton Z600 Series	32 max. [2]
Other detectors	32 max. [2][3]
Manual call points	32 max.

[1] Or as defined by local standards. Maximum of 30 detectors for NBN S 21-100 installations.
[2] Systems using these detectors are not EN 54-13 compliant.
[3] Provided that the detectors meet the zone specifications included in the installation manual.

Manual call point resistance [1]

Mixed zone	100 Ω
Manual zone	100 to 680 Ω

[1] Resistance must be rated at 1 W min.

© 2024 Carrier. All rights reserved.

P/N BCN-xxxxxxx-EN • REV 001 • ISS 10JUN24

Inputs and outputs

The function of inputs and outputs is defined by the operating mode.

Inputs

EN 54-2	Remote reset	Delays off
EN 54-2 Evacuation	Remote reset	Delays off
EN 54-2 Scandinavia	Fire routing / extended fire routing delay [1]	Delays off
BS 5839-1	Class change	Delays off
NBN S 21-100	Remote reset	Delays off
NEN 2535	Fire routing inhibit delay	Delays off

[1] Four- and eight-zone control panels only.

Input circuits should have a maximum resistance of 100 Ω (including any cable resistance).

Sounder outputs

EN 54-2	OUT1, OUT2, and OUT3
EN 54-2 Evacuation	OUT1, OUT2, OUT3, and OUT4
EN 54-2 Scandinavia	OUT1, OUT2, and OUT3
BS 5839-1	OUT1, OUT2, OUT3, and OUT4
NBN S 21-100	OUT1 and OUT2 (Evacuation sounders) OUT3 and OUT4 (Warning sounders)
NEN 2535	OUT1 and OUT2

Fire routing outputs

EN 54-2	OUT4
EN 54-2 Scandinavia	OUT4
NEN 2535	OUT3 (automatic) OUT4 (manual)

Mains fuses and batteries

Mains fuses

110 VAC [1]	T 3.15A 250V
230 VAC	T 2A 250V

[1] See your installation manual for 110 VAC operation requirements.

Batteries

Two- and four-zone panels	12 V, 7.2 Ah
Eight-zone panel	12 V, 7.2 Ah or 12 V, 12 Ah

Basic configuration

Default configuration

Operating mode	01 (EN 54-2)
Zone end-of-line	Passive
Zone type	Mixed

The configuration controls are located on the control panel interface.

Configuration controls

Button	Function
1	Scroll to the next configuration menu on the seven-segment display.
2	Scroll to the next configuration value for the active menu on the seven-segment display.
3	Scroll to the previous configuration menu on the seven-segment display.
4	Scroll to the previous configuration value for the active menu on the seven-segment display.
Enter	Confirm a menu selection or a value selection entry.

The configuration controls are also used to enter the user level password. The seven-segment display is visible when the control panel cover is removed.

Seven-segment display

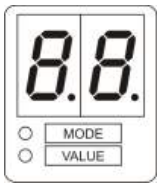

LED	Indications
Mode	Steady: Select a *menu* using buttons 1 and 3. — or — Flashing: Select a *submenu* using buttons 1 and 3.
Value	Steady: Select a *value* using buttons 2 and 4.

Basic configuration menu

Selected options from the basic configuration menu are shown below. The default password for basic configuration is 3333.

Display	Menu	Values
b A	Basic default configuration	01 to 32
S d	Sounder delay	00 to 10 minutes
F d	Fire routing delay	00 to 10 minutes
F E	Extended fire routing delay	00 to 10 minutes
r C	Restore previous configuration	

Display	Menu	Values
F C	Restore factory configuration	
E -	Exit without saving	
E S	Exit and save	

Basic default configuration presets

A selected list of basic default configuration presets is shown below. For a detailed list of all available configuration presets and characteristics, see your installation manual.

Display	Operating mode	Zone type
01	EN 54-2	Mixed
05	EN 54-2 Evacuation	Mixed
07	EN 54-2 Scandinavia	Mixed
11	BS 5839-1 [1]	Mixed
21	NBN S 21-100	Odd zones: Automatic Even zones: Manual
31	NEN 2535	Odd zones: Automatic Even zones: Manual

[1] Requires an active end-of-line device for zone termination.

Contact information and product documentation

For contact information or to download the latest product documentation, visit firesecurityproducts.com.

Product warnings and disclaimers

THESE PRODUCTS ARE INTENDED FOR SALE TO AND INSTALLATION BY QUALIFIED PROFESSIONALS. CARRIER FIRE & SECURITY B.V. CANNOT PROVIDE ANY ASSURANCE THAT ANY PERSON OR ENTITY BUYING ITS PRODUCTS, INCLUDING ANY “AUTHORIZED DEALER” OR “AUTHORIZED RESELLER”, IS PROPERLY TRAINED OR EXPERIENCED TO CORRECTLY INSTALL FIRE AND SECURITY RELATED PRODUCTS.

For more information on warranty disclaimers and product safety information, please check https://firesecurityproducts.com/policy/product-warning/ or scan the QR code: