KIDDE COMMERCIAL

# NC Series Conventional Fire Alarm Control Panel Installation Manual

P/N BCN-3100017-EN • REV 001 • ISS 11JUN24

**Copyright**

© 2024 Carrier. All rights reserved.

**Trademarks and patents**

CleanMe and the NC Series name and logo are trademarks of Carrier.

Other trade names used in this document may be trademarks or registered trademarks of the manufacturers or vendors of the respective products.

**Manufacturer**

Carrier Manufacturing Poland Spółka Z o.o.
Ul. Kolejowa 24, 39-100 Ropczyce, Poland.

Authorized EU manufacturing representative:
Carrier Fire & Security B.V., Kelvinstraat 7, 6003 DH Weert, Netherlands.

**Firmware version**

This document applies to control panels with firmware version 2.3 or later.

**Conformity**

CE

**European Union directives**

2014/30/EU (EMC Directive). Hereby, Carrier declares that this device is in compliance with the essential requirements and other relevant provisions of Directive 2014/30/EU.

2012/19/EU (WEEE Directive): Products marked with this symbol cannot be disposed of as unsorted municipal waste in the European Union. For proper recycling, return this product to your local supplier upon the purchase of equivalent new equipment, or dispose of it at designated collection points. For more information see: recyclethis.info.

2006/66/EC (Battery Directive): This product contains a battery that cannot be disposed of as unsorted municipal waste in the European Union. See the product documentation for specific battery information. The battery is marked with this symbol, which may include lettering to indicate cadmium (Cd), lead (Pb), or mercury (Hg). For proper recycling, return the battery to your supplier or to a designated collection point. For more information see: recyclethis.info.

**Contact information and product documentation**

For contact information or to download the latest product documentation, visit firesecurityproducts.com.

# Content


Important information ii

**Chapter 1** **Introduction 1**
Product range 2
Product compatibility 2
Operating modes 3

**Chapter 2** **Installation 5**
Cabinet layout 6
Cabinet installation 9
Connections 11

**Chapter 3** **Configuration and commissioning 25**
The user interface 27
User levels 30
Configuration overview 32
Basic configuration 36
Advanced configuration 46
Expansion board configuration 61
Fire network and repeaters configuration 64
Commissioning 71

**Chapter 4** **Maintenance 75**
Fire alarm system maintenance 76
Battery maintenance 77

**Chapter 5** **Technical specifications 79**
Zone specifications 80
Input and output specifications 81
Power supply specifications 83
Mechanical and environmental specifications 84
Fire network specifications 85
Cabinet drawings and dimensions 86

**Appendix A** **Configuration presets 91**
Operating mode presets 92
Expansion board presets 98

**Appendix B** **Regulatory information 103**
European standards 104
European regulations for construction products 105

**Index 107**

# Important information

This is the installation manual for NC Series Conventional Fire Alarm Control Panels. Read these instructions and all related documentation entirely before installing or operating this product.

## Firmware compatibility

Information in this document applies to control panels with firmware version 2.3 or later. This document must not be used as a guide to installation, configuration, or operation of control panels with an earlier firmware. For instructions on how to check the firmware version of your control panel, see “Firmware, configuration, and serial number information” on page 59.

## Limitation of liability

To the maximum extent permitted by applicable law, in no event will Carrier be liable for any lost profits or business opportunities, loss of use, business interruption, loss of data, or any other indirect, special, incidental, or consequential damages under any theory of liability, whether based in contract, tort, negligence, product liability, or otherwise. Because some jurisdictions do not allow the exclusion or limitation of liability for consequential or incidental damages the preceding limitation may not apply to you. In any event the total liability of Carrier shall not exceed the purchase price of the product. The foregoing limitation will apply to the maximum extent permitted by applicable law, regardless of whether Carrier has been advised of the possibility of such damages and regardless of whether any remedy fails of its essential purpose.

Installation in accordance with this manual, applicable codes, and the instructions of the authority having jurisdiction is mandatory.

While every precaution has been taken during the preparation of this manual to ensure the accuracy of its contents, Carrier assumes no responsibility for errors or omissions.

## Product warnings and disclaimers

THESE PRODUCTS ARE INTENDED FOR SALE TO AND INSTALLATION BY QUALIFIED PROFESSIONALS. CARRIER FIRE & SECURITY B.V. CANNOT PROVIDE ANY ASSURANCE THAT ANY PERSON OR ENTITY BUYING ITS PRODUCTS, INCLUDING ANY “AUTHORIZED DEALER” OR “AUTHORIZED RESELLER”, IS PROPERLY TRAINED OR EXPERIENCED TO CORRECTLY INSTALL FIRE AND SECURITY RELATED PRODUCTS.

For more information on warranty disclaimers and product safety information, please check https://firesecurityproducts.com/policy/product-warning/ or scan the QR code:

## Advisory messages

Advisory messages alert you to conditions or practices that can cause unwanted results. The advisory messages used in this document are shown and described below.

**WARNING:** Warning messages advise you of hazards that could result in injury or loss of life. They tell you which actions to take or to avoid in order to prevent the injury or loss of life.

**Caution:** Caution messages advise you of possible equipment damage. They tell you which actions to take or to avoid in order to prevent the damage.

**Note:** Note messages advise you of the possible loss of time or effort. They describe how to avoid the loss. Notes are also used to point out important information that you should read.

## Product symbols

The following symbols are used on the product.

This symbol indicates that caution is necessary when operating or maintaining the device or control close to where the symbol is placed.

This symbol indicates that the installation manual should be consulted when operating or maintaining the device or control close to where the symbol is placed.

# Chapter 1
# Introduction

**Summary**

This chapter provides an introduction to your control panel and the available operating modes.

**Content**

Product range 2
Product compatibility 2
Operating modes 3

# Product range

The NC Series Conventional Fire Alarm Control Panels includes the models shown below.

| Model [1] | Description |
|---|---|
| NC-PF2, NC-PF2-SC | Two-zone conventional fire alarm control panel |
| NC-PF4, NC-PF4-SC | Four-zone conventional fire alarm control panel with fire routing |
| NC-PF8, NC-PF8-SC | Eight-zone conventional fire alarm control panel with fire routing |

[1] -SC variants include a fireman's key.

All models have been designed in accordance with EN 54-2, EN 54-4, BS 5839-1, NBN S 21-100, and NEN 2535 standards. For further details, see Appendix B "Regulatory information" on page 103.

# Product compatibility

Products compatible with these control panels are listed in the product compatibility list. Only those products specified in the compatibility list are guaranteed to be compatible.

To download the latest product compatibility list, visit firesecurityproducts.com.

# Operating modes

Supported operating modes are shown in the table below. The default operating mode is EN 54-2 (with EN 54-13 supervision disabled).

**Table 1: Operating modes**

| Operating mode | EN 54-13 option available [1] | Region |
|---|---|---|
| EN 54-2 (default) | Yes | European Union |
| EN 54-2 Evacuation | Yes | European Union (Spain) |
| EN 54-2 Scandinavia | Yes | European Union (Scandinavia) |
| BS 5839-1 (No 2nd stage) | No | United Kingdom |
| BS 5839-1 (2nd stage) | No | United Kingdom |
| NBN S 21-100 | Yes | Belgium |
| NEN 2535 [2] | Yes | The Netherlands |

[1] EN 54-13 supervision requires compatible system wiring and devices and must be enabled by the installer in the control panel configuration.
[2] Requires a 2010-1-SB expansion board to be installed (not supplied).

# Chapter 2
# Installation


**Summary**

This chapter explains how to install your control panel, and how to connect zones, fire system devices, and the power supply.


**Caution:** This product must be installed and maintained by qualified personnel adhering to the CEN/TS 54-14 standard (or the corresponding national standard) and any other applicable regulations.

**Content**


Electrical safety 6
Cabinet layout 7
- Cabinet layout for two- and four-zone control panels 7
- Cabinet layout for eight-zone control panels 8

Cabinet installation 9
- Preparing the cabinet 9
- Where to install the cabinet 9
- Fixing the cabinet to the wall 10

Connections 11
- Recommended cables 11
- Overview of fire system connections 12
- Connecting zones and zone devices 14
- Connecting inputs 16
- Connecting supervised outputs 18
- Connecting the mains power supply 21
- Connecting the batteries 22
- Powering auxiliary equipment (24 VDC auxiliary output) 22
- Connecting alarm and fault relays 23
- Connecting expansion boards 23
- Connecting a fire network 23

# Electrical safety

**WARNING:** Electrocution hazard. To avoid personal injury or death from electrocution, remove all sources of power and allow stored energy to discharge before installing or removing equipment.

**Caution:** Equipment damage hazard. This product is sensitive to electrostatic discharge (ESD). To avoid damage, follow accepted ESD handling procedures.

# Cabinet layout

## Cabinet layout for two- and four-zone control panels

**Figure 1: Cabinet layout for two- and four-zone control panels**

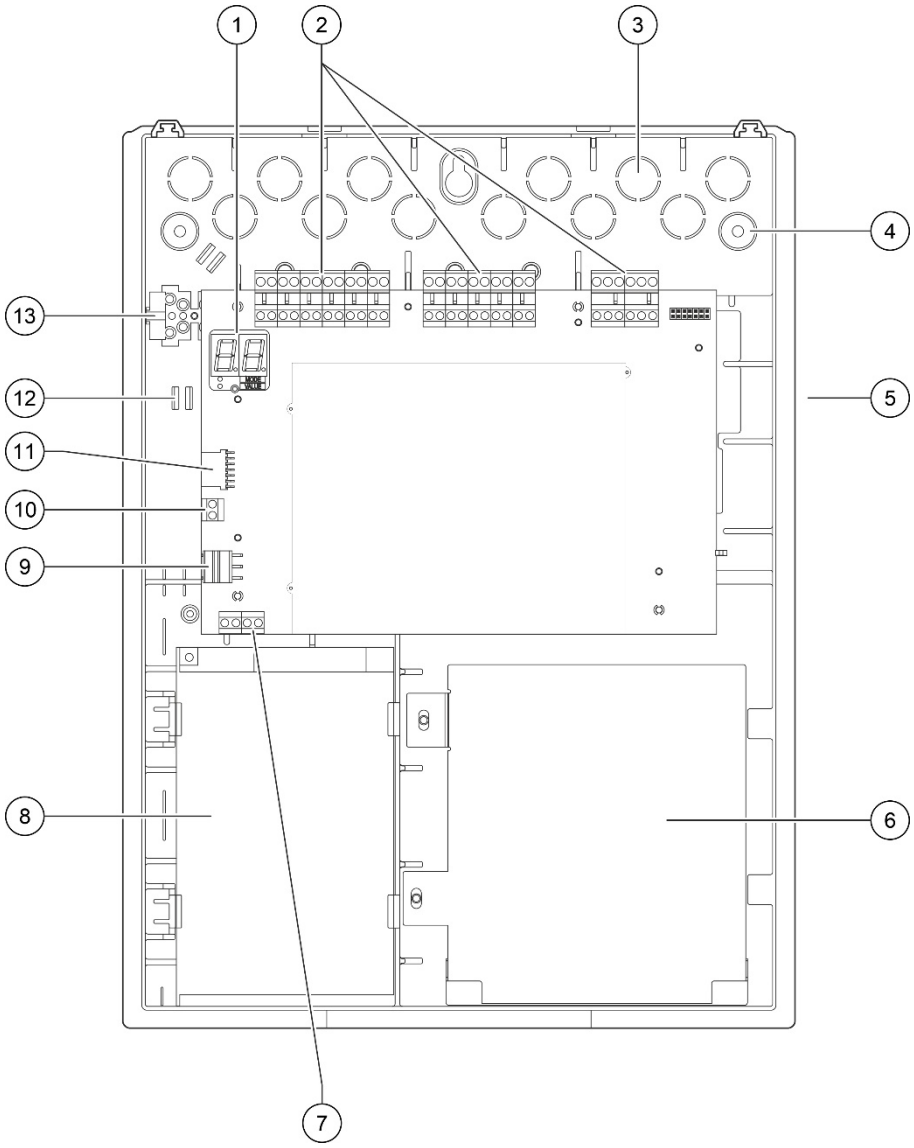


1. Seven-segment display
2. Zone and fire system connectors
3. Cable knockouts
4. Mounting screw knockouts
5. Network board connector (on the back of the PCB)
6. Battery area
7. Key connector (-SC models)
8. Power supply unit
9. Power supply connector
10. Battery connector
11. Expansion board connector
12. Cable holder
13. Fuse terminal block

# Cabinet layout for eight-zone control panels

**Figure 2: Cabinet layout for eight-zone control panels**

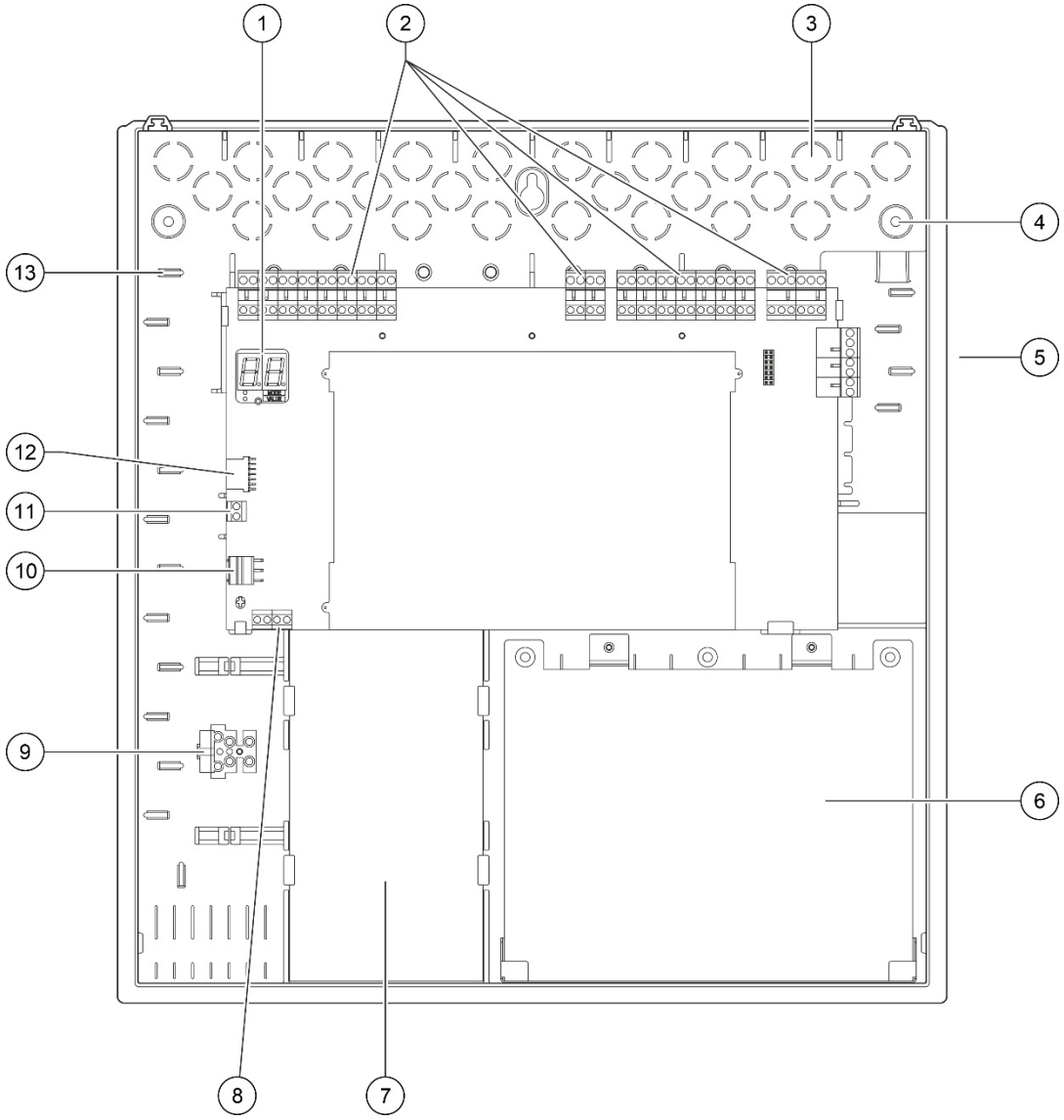


1. Seven-segment display
2. Zone and system connectors
3. Cable knockouts
4. Mounting screw knockouts
5. Network board connector (on the back of the PCB)
6. Battery area
7. Power supply unit
8. Key connector (-SC models)
9. Fuse terminal block
10. Power supply connector
11. Battery connector
12. Expansion board connector
13. Cable holder

# Cabinet installation

## Preparing the cabinet

Before installing the cabinet, remove the front cover, and then remove cable knockouts from the top, bottom, and rear of the cabinet as required.

## Where to install the cabinet

Make sure the installation location is free from construction dust and debris, and immune to extreme temperature ranges and humidity. (See Chapter 5 “Technical specifications” on page 79 for more information on the operating temperature and relative humidity specifications.)

Allow for enough floor and wall space so the panel can be installed and serviced without any obstructions. The cabinet should be mounted so that the user interface is at eye level.

Note that the control panel must be assembled and installed according to the ordinances and codes that are in effect in your market or region.

## Fixing the cabinet to the wall

The requirements for nylon wall plugs and screws are shown in the following table.

| Model | Screws | Wall plugs |
|---|---|---|
| Two- and four-zone control panels | M4 × 30 (4X) | Ø 6 mm (4X) |
| Eight-zone control panel | M4 × 30 (5X) | Ø 6 mm (5X) |

**Figure 3: Mounting hole locations**

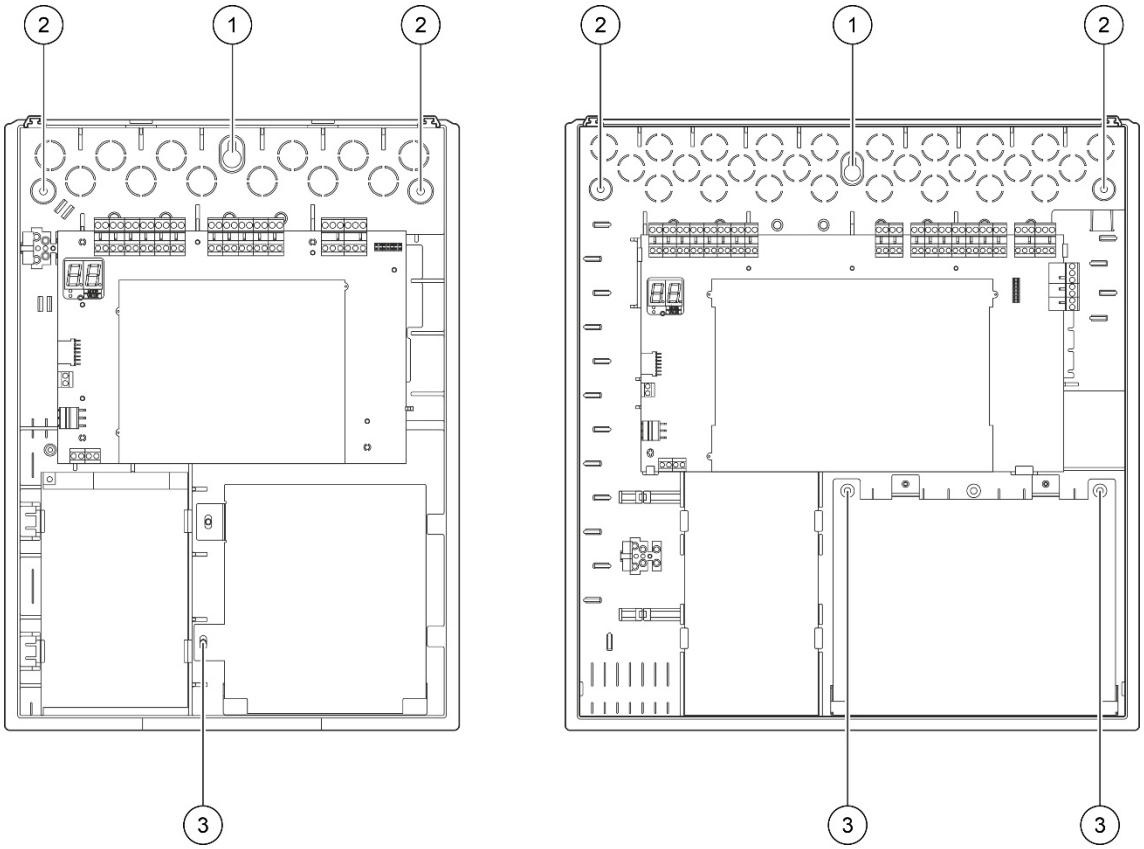


### To fix the control panel cabinet to the wall:

1. Mark drill points on the wall, using the cabinet as a template.
2. Drill all required holes and insert a 6 mm wall plug into each.
3. Insert screw (1) half way and hang the cabinet onto this screw.
4. Insert screws (2) and tighten.
5. Insert screws (3) and tighten.
6. Tighten screw (1).

# Connections

## Recommended cables

Recommended cables for optimal system performance are shown in the table below.

**Table 2: Recommended cables**

| Cable | Cable description | Maximum cable length |
|---|---|---|
| Mains cable | 3 x 1.5 mm² | N/A |
| Input, output, auxiliary 24V, relay, expansion board | 0.13 to 3.31 mm² (26 to 12 AWG) twisted-pair (max. 40 Ω / 500 nF) | 2 km |
| Zone cable (mixed zone) | 0.13 to 3.31 mm² (26 to 12 AWG) twisted-pair (max. 40 Ω / 500 nF) | 2 km |
| Zone cable (automatic or manual zones) | 0.13 to 3.31 mm² (26 to 12 AWG) twisted-pair (max. 55 Ω / 500 nF) | 2 km |
| Fire network cable | 0.13 to 3.31 mm² (26 to 12 AWG) twisted-pair, Cat 5 | 1.2 km |

**Note:** Other types of cable may be used subject to site-specific EMI conditions and installation testing.

Use 20 mm cable glands to ensure clean and secure connections at the control panel cabinet. All cables should be fed through the cable guides in the cabinet housing to eliminate movement.

# Overview of fire system connections

Standard, EN 54-13, BS 5839-1, and intrinsically-safe fire system connections are shown in the following figures.

**Figure 4: Standard fire system connections (no EN 54-13 requirement)**

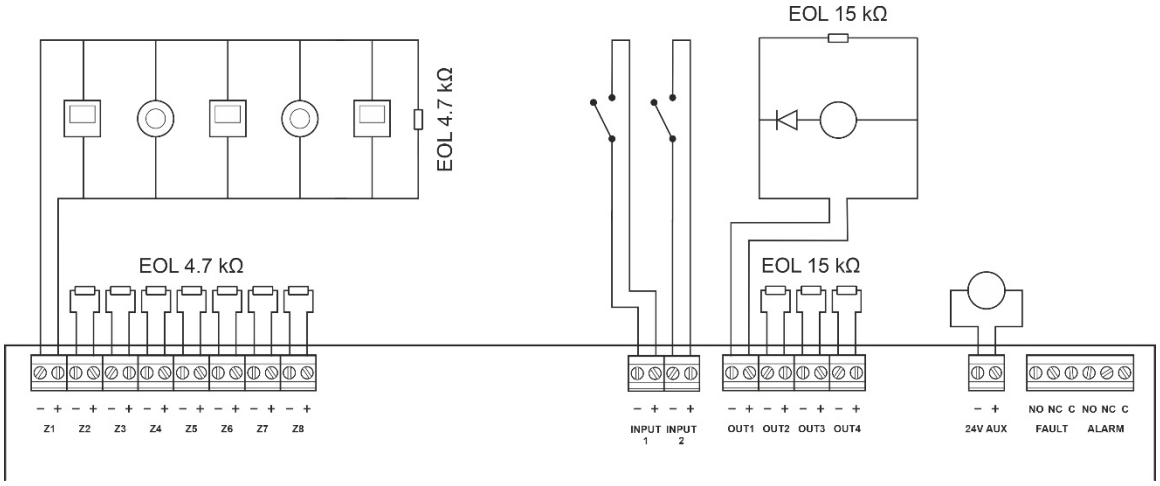


**Figure 5: EN 54-13 fire system connections**

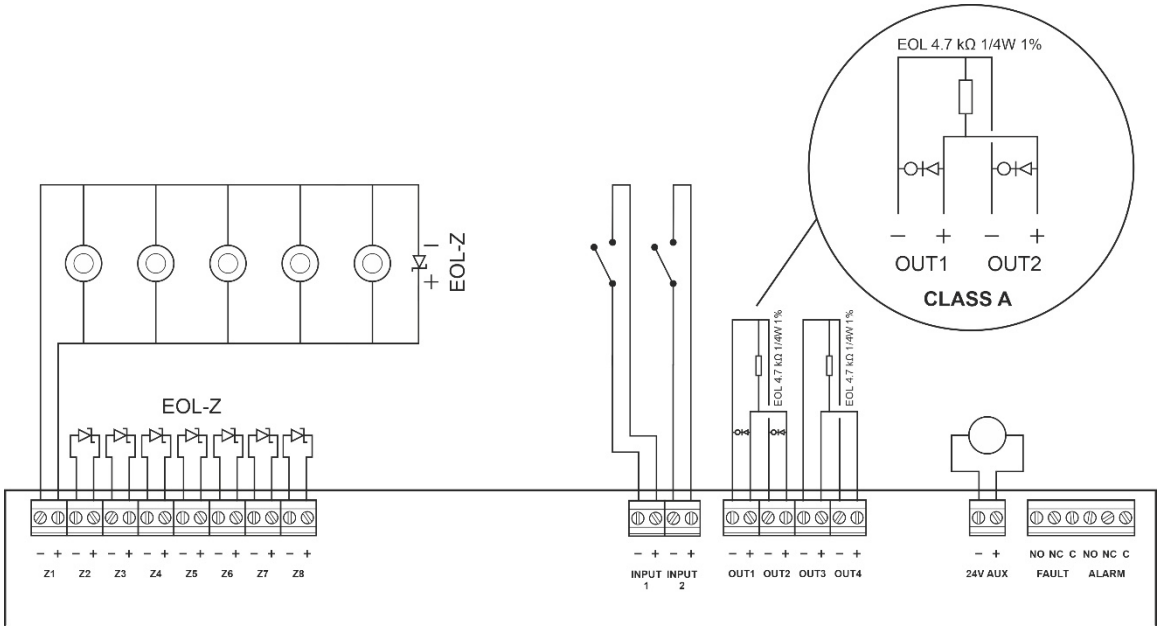

**Figure 6: BS 5839-1 fire system connections**

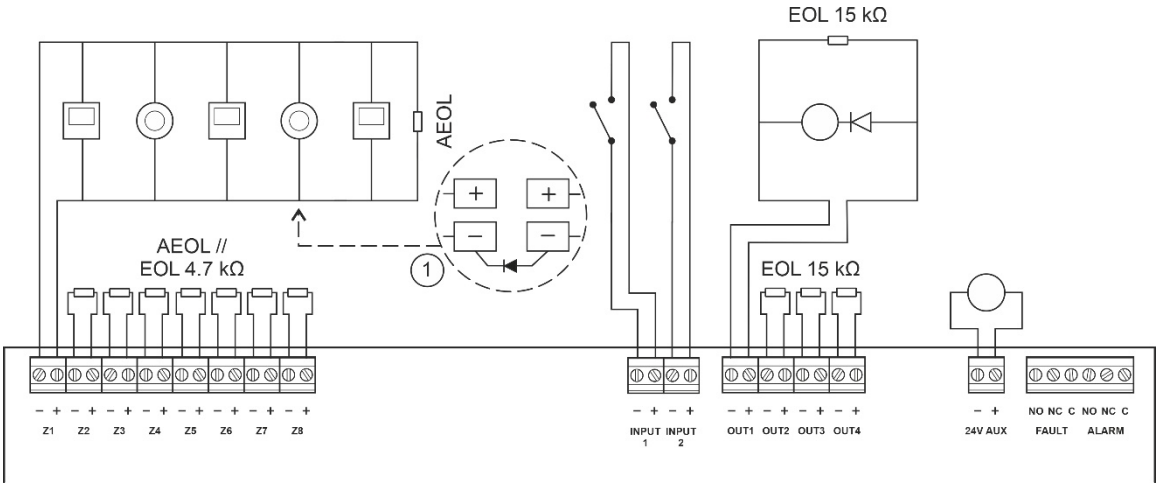


1. A diode must be connected on the detector base. (Consult your detector installation manual for more details).

**Figure 7: Intrinsically-safe fire system connections**

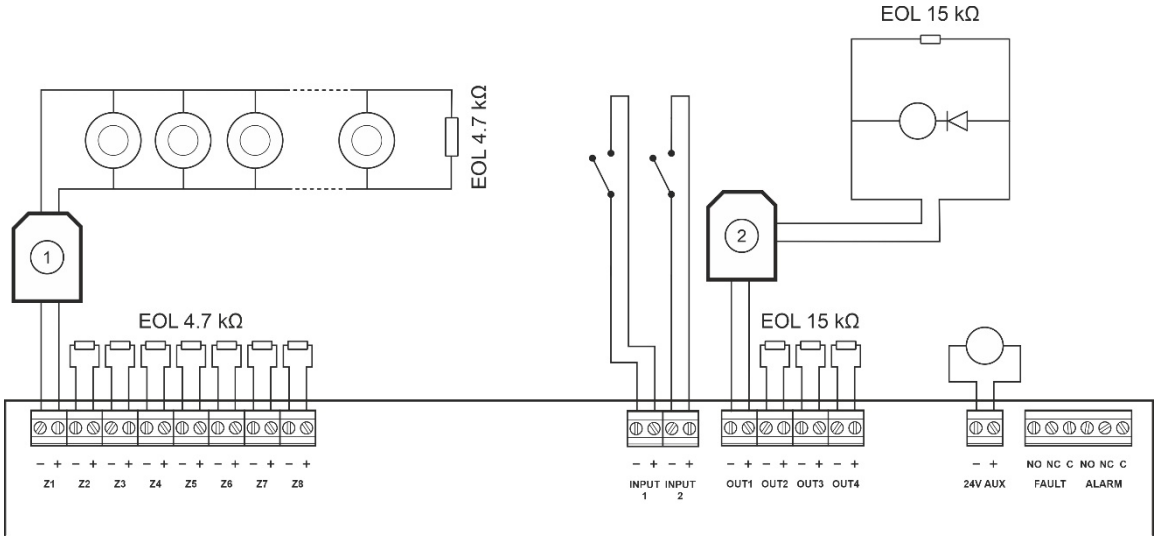


1. Galvanic barrier for intrinsically-safe conventional detectors.
2. Galvanic barrier for intrinsically-safe fire notification devices.

# Connecting zones and zone devices

## Connecting zones

Connect zone wires as shown in Figure 4, Figure 5, Figure 6, and Figure 7 above. Line resistance is shown in Table 3 below.

**Table 3: Line resistance**

| Zone type | Line resistance | |
|---|---|---|
| | **Standard and BS5839-1** | **EN 54-13 and intrinsically-safe** |
| Mixed | 40 Ω max. | Not supported [1] |
| Automatic | 55 Ω max. | 50 Ω max. |
| Manual | 55 Ω max. | 50 Ω max. |

[1] Mixed zones are not permitted in installations requiring EN 54-13 or intrinsically-safe configuration.

### To measure the line resistance:

1. Create a short circuit at the end of the zone line.
2. Measure the resistance between the positive and negative lines with a multimeter.

**Note:** The default zone detection settings for each operating mode can be found in Appendix A “Configuration presets” on page 91. To change the zone detection setting, see “Advanced configuration” on page 46.

## Terminating zones

Zone termination is required at all times, whether the zone is used or not. The type of termination depends on the installation, as shown in Table 4 below.

**Table 4: Zone terminations**

| Installation type | Zone termination |
|---|---|
| Standard and intrinsically-safe zones | 4.7 kΩ end-of-line resistor |
| EN 54-13 zones | EOL-Z end-of-line device (polarity sensitive) |
| BS 5839-1 zones | Active end-of-line device [1] |

[1] For BS 5839-1 installations an active end-of-line device must be installed (instead of an end-of-line resistor).

**Note:** Unused zones must be terminated with an active end-of-line device or configured as passive end-of-line and terminated with a 4.7 kΩ, 5%, 1/4 W end-of-line resistor.

### Connecting detectors

Connect detectors as shown in Figure 4, Figure 5, Figure 6, and Figure 7 starting on page 12.

The panel supports conventional detectors. To guarantee optimal operation, use the detectors specified in the compatibility list. For more information on fire detectors, see Chapter 5 “Technical specifications” on page 79.

### Connecting manual call points

Connect manual call points in parallel, as shown in Figure 4, Figure 5, Figure 6, and Figure 7 starting on page 12. Each zone circuit can support up to 32 manual call points.

Manual call points must have a resistance installed in series with the normally open (NO) contact to avoid short-circuit faults and to allow the control panel to identify the origin of the alarm (automatic or manual). Note that many of the MCPs in the compatibility list already include this resistor.

The resistance required will depend on the zone type as shown in Table 5 below.

**Table 5: MCP resistances**

| **Zone type** | **Manual call point resistance** [1] | | |
|---|---|---|---|
| | **Standard / BS 5839-1** | **EN 54-13** | **Intrinsically safe** |
| Mixed | 100 Ω | Not supported | Not supported |
| Manual | 100 to 680 Ω | 100 to 470 Ω | 250 to 560 Ω |

[1] Resistance must be rated at 1 W minimum.

**Note:** The default zone detection settings for each operating mode can be found in Appendix A “Configuration presets” on page 91. To change the zone detection setting, see “Advanced configuration” on page 46.

# Connecting inputs

## Input functionality

Each control panel has two inputs, marked INPUT1 and INPUT2. These circuits are connected as normally open and activated when closed.

Both inputs are configurable (see “Input configuration” on page 55). The default functionality of each input is defined by the panel operating mode and EN 54-13 configuration. See Table 6 below.

**Table 6: Default input functionality for inputs 1 and 2**

| Operating mode | INPUT1 | INPUT2 |
|---|---|---|
| EN 54-2 [1] | Remote reset | Delays off |
| EN 54-2 Evacuation [1] | Remote reset | Delays off |
| EN 54-2 Scandinavia [1] | Extended fire routing delay [2] | Delays off |
| BS 5839-1 [1] | Class change | Delays off |
| NBN S 21-100 [1] | Remote reset | Delays off |
| NEN 2535 (EN 54-13 disabled) | Fire routing inhibit delay | Delays off |
| NEN 2535 (EN 54-13 enabled) | Fire routing acknowledgement (type 1, 100 seconds) [3] | Fault warning output (open supervision) |

[1] No change to input functionality with EN 54-13 enabled.
[2] Remote reset for two-zone control panels operating in EN 54-2 Scandinavia mode.
[3] Supervised input (wiring short or open).

## Connecting unsupervised inputs

Connect unsupervised input switches to INPUT1 and INPUT2, as shown in Figure 4 or Figure 5 on page 12. Nominal resistance values (including any cable resistance) are shown below.

**Table 7: Nominal resistance values for unsupervised inputs**

| Input function | Activated | Standby |
|---|---|---|
| Remote reset command | > 9 kΩ to ≤ 9 kΩ transition | N/A |
| Extended fire routing delay | ≤ 9 kΩ | > 9 kΩ |
| Fire routing inhibit delay | ≤ 9 kΩ | > 9 kΩ |
| Class change | ≤ 9 kΩ | > 9 kΩ |
| Delays off | ≤ 9 kΩ | > 9 kΩ |
| FBF (sounders disabled) [1] | ≤ 9 kΩ | > 9 kΩ |

[1] Regional fire brigade panels.

## Connecting supervised inputs

Connect supervised input switches to INPUT1 and INPUT2, as shown in Figure 8 below.

**Figure 8: Connecting supervised inputs**

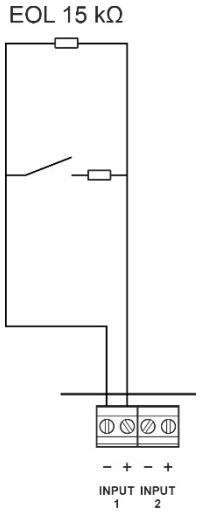


Nominal resistance values (including any cable resistance) are shown in Table 8 below.

**Table 8: Nominal resistance values for supervised inputs**

| Input function | Input | Value [1] | State |
|---|---|---|---|
| Fire routing acknowledgement (type 1, 100 seconds) | 1 | ≤ 220 Ω | Short circuit |
| | | > 220 Ω to 8 kΩ | Active [2] |
| | | > 8 kΩ to 10 kΩ | Fault [3] |
| | | > 10 kΩ to 20 kΩ | Standby |
| | | > 20 kΩ | Open circuit |

[1] Values between each state may vary, depending on tolerance.
[2] For EN 54-13 compliance, the active impedance should be in the range of 220 Ω to 3.9 kΩ.
[3] High impedance fault.

**Table 9: Nominal resistance values for “fault warning output” open supervision inputs**

| Input function | Standby | Fault (open) |
|---|---|---|
| Fault warning output: open circuit supervision | ≤ 9 kΩ | > 9 kΩ |

[1] For the open circuit supervision of the fault warning output with the input, a 2010-FS EOL board must be installed. See “Connecting the fault warning output” on page 20.

## Connecting supervised outputs

Control panels have the following supervised outputs:

- Two-zone control panels have two outputs, marked OUT1 and OUT2.
- Four- and eight-zone control panels have four outputs, marked OUT1, OUT2, OUT3, and OUT4.

The outputs are supervised for open and short circuit faults.

### Output class

The control panel outputs can be configured for Class A or Class B operation, depending on the supervision mode required. The default output configuration is Class B.

**Table 10: Output classes and EN 54-13 supervision**

| Output class | EN 54-13 supervision | Description |
|---|---|---|
| Class B (default) | Disabled | For installations not requiring EN 54-13 compliance |
| Class A | Enabled | For installations requiring EN 54-13 compliance |

For more information, see “EN 54-13 supervision mode” on page 39.

### Output functionality

The function of each output is defined by the panel operating mode and output class configuration (the default is Class B). All outputs are overload protected.

**Table 11: Class B output functionality (default)**

| Operating mode | OUT1 | OUT2 | OUT3 | OUT4 |
|---|---|---|---|---|
| EN 54-2 | Sounders | Sounders | Sounders | Fire routing |
| EN 54-2 Evacuation | Sounders | Sounders | Sounders | Sounders |
| EN 54-2 Scandinavia | Sounders | Sounders | Sounders | Fire routing |
| BS 5839-1 | Sounders | Sounders | Sounders | Sounders |
| NBN S 21-100 | Evacuation sounders | Evacuation sounders | Warning sounders | Warning sounders |
| NEN 2535 | Sounders | Sounders | Fire routing (automatic) | Fire routing (manual) |

**Table 12: Class A output functionality (for EN 54-13 compliance)**

| Operating mode | OUT1/OUT2 | OUT3/OUT4 |
|---|---|---|
| EN 54-2 | Sounders | Fire routing |
| EN 54-2 Evacuation | Sounders | Sounders |
| EN 54-2 Scandinavia | Sounders | Fire routing |
| NBN S 21-100 | Evacuation sounders | Warning sounders |
| NEN 2535 | Sounders | Fire routing |

### Output termination

Output termination is required at all times, whether the output is used or not. The type of termination depends on the output class, as shown in Table 13 below.

**Table 13: Termination required for output classes**

| Output class | Output termination |
|---|---|
| Class B (default) | All outputs require a 15 kΩ end-of-line resistor for termination. If an output is not used, the end-of-line resistor must be installed across the unused output terminals (see Figure 4 on page 12). |
| Class A (EN 54-13) | All outputs require a 4.7 kΩ, 1/4W, 1% end-of-line resistor for termination. If an output group (OUT1/2, OUT3/4) is not used, the end-of-line resistor must be installed across the unused output terminals (see Figure 5 on page 12). |

See “Input and output specifications” on page 81 for details on voltage and current ratings.

### Output polarity

All outputs are polarity sensitive. Observe polarity or install a 1N4007 diode or equivalent to avoid inverted activation issues.

### Connecting sounders or other notification devices to supervised outputs

Depending on the operating mode, up to four sounder or notification device circuits can be connected. See Table 11 on page 18.

### Connecting fire routing equipment to supervised outputs

Connect fire routing equipment as shown in Table 14 below.

**Table 14: Connecting fire routing equipment**

| Operating mode | Output Class | Fire routing (automatic) | Fire routing (manual) |
|---|---|---|---|
| EN 54-2<br>EN 54-2 Scandinavia | Class B (default) | OUT4 | OUT4 |
| | Class A (EN 54-13) | OUT3, OUT4 | OUT3, OUT4 |
| NEN 2535 | Class B (default) | OUT3 | OUT4 |
| | Class A (EN 54-13) | OUT3, OUT4 | OUT3, OUT4 |

**Note:** Fire routing in EN 54-2 operating modes makes no distinction between automatic and manual alarms. If this feature is required, install a 2010-1-SB expansion board and use separate outputs for each alarm type.

### Connecting the fault warning output to external equipment

**Caution:** This connection is mandatory to comply with EN 54-2 Clause 8.9 (Fault Warning Routing Equipment).

**Note:** This feature is only available in NEN 2535 mode with a 2010-1-SB supervised expansion board configured to presets 32 or 35. See “Expansion board presets” on page 98.

Connect the external equipment to the OUT3 output on the 2010-1-SB supervised board. The wiring must be returned back to the control panel to the 2010-FS-EOL user supervisory board connected to INPUT2, as shown below.

**Figure 9: Connecting to fault warning output**

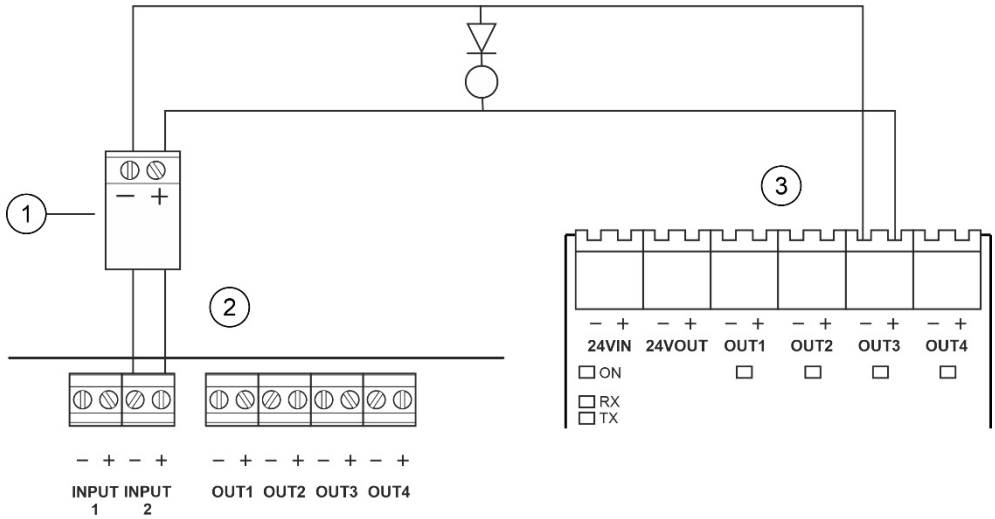


1. 2010-FS-EOL user board
2. Control panel PCB connectors
3. 2010-1-SB expansion board connectors

## Connecting the mains power supply

**Note:** To avoid unwanted arcing, connect the mains power supply before connecting the batteries.

The control panel can be operated at 110 V at 60 Hz or 230 V at 50 Hz (+10%/−15%).

Mains power should be sourced directly from a separate circuit breaker in the building electrical supply distribution board. This circuit should be clearly marked, have a bipolar disconnect device, and only be used for fire detection equipment.

Feed all mains cables through the appropriate cable knockouts and connect them to the fuse terminal block as shown in Figure 10 below.

Keep mains cables separate from other cabling to avoid potential short circuits and interference. Always secure mains cables to the cabinet to prevent movement.

**Figure 10: Connecting the mains power supply**

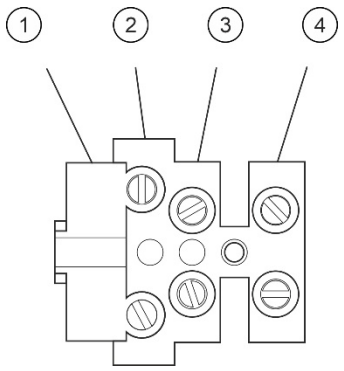


1. Mains fuse
2. Live
3. Earth
4. Neutral

For fuse specifications, see Chapter 5 “Technical specifications” on page 79.

## Connecting the batteries

The control panel requires two 12 V, 7.2 or 12 Ah rechargeable, sealed, lead-acid batteries (see “Compatible batteries” on page 77).

Batteries must be installed in series, at the base of the control panel cabinet. Use the battery lead and bridge provided and connect batteries to the BATT connector on the control panel PCB, as shown below. Polarity must be observed.

**Note:** If the control panel indicates a Supply Fault, then the batteries may need to be replaced. See “Battery maintenance” on page 77.

**Figure 11: Connecting the batteries**

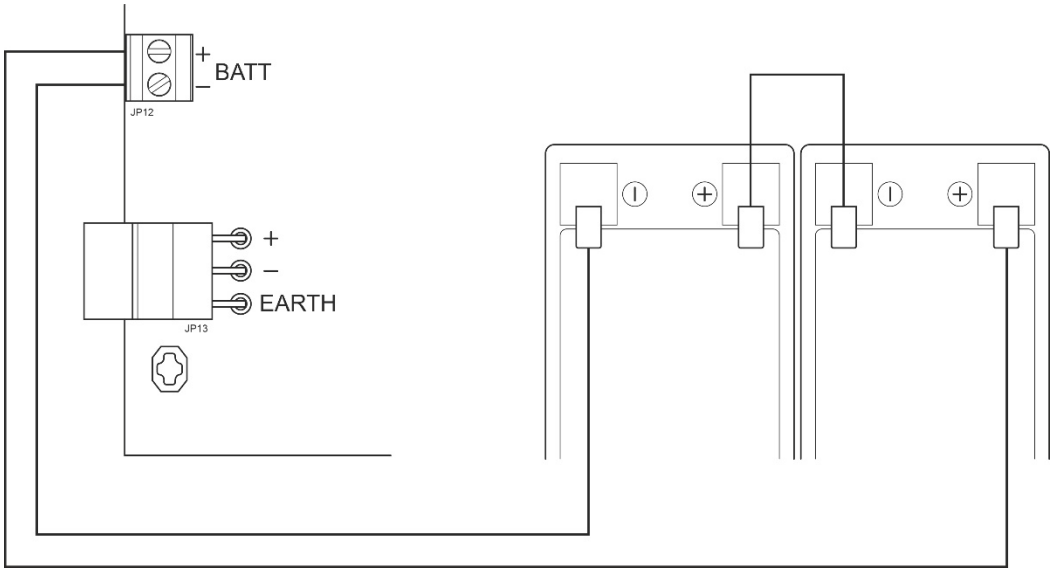


**Caution:** Risk of equipment damage. No other equipment may be connected to the BATT connector.

## Powering auxiliary equipment (24 VDC auxiliary output)

Connect auxiliary equipment that requires 24 VDC power to the 24 AUX terminals as shown in Figure 4 on page 12. The 24 VDC auxiliary output is supervised for short circuit and voltage output level.

**WARNING:** Never use the auxiliary output to power expansion boards connected to the same control panel as this might damage the control panel hardware.

## Connecting alarm and fault relays

Connect the alarm and fault equipment to the ALARM and FAULT relays.

Each potential-free relay output is activated in an alarm or fault situation respectively. The fault relay output is activated (a short circuit between the common (C) and normally closed (NC) terminals of the relay) when there is no fault.

The maximum contact rating for each relay circuit is 2 A at 30 VDC.

## Connecting expansion boards

**Caution:** Risk of equipment damage. Always disconnect the control panel from the mains power supply before installing an expansion board.

See your expansion board installation sheet for detailed installation information.

## Connecting a fire network

**Note:** See the *2010-1-NB Network Board Installation Sheet* for detailed installation and connection information.

Each 2010-1-NB network board has two ports. Each port is connected (point to point) to the corresponding ports of the network board in another control panel.

**Figure 12: Network board connections**

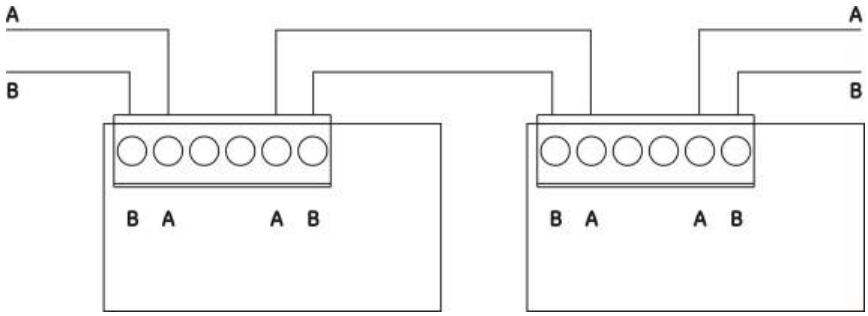


Two wiring options are possible:

- Ring configuration
- Bus configuration

## Ring configuration

Ring network configuration is recommended as it provides for redundancy in the transmission path.

For ring configuration (Class A), use both ports to connect all network boards or control panels to form a ring, as shown below.

**Figure 13: Fire network ring configuration**

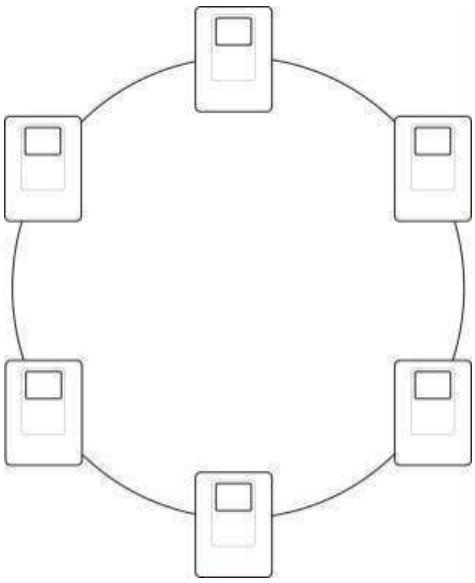

## Bus configuration

**Note:** To be compliant with EU regulations, use this network configuration only in cases where the detection zones and mandatory EN 54-2 output functions (sounder and fire routing outputs) are not remote between panels.

Bus network configuration is not normally recommended, as it does not provide for redundancy in the transmission path.

For bus configuration (Class B), connect control panels as shown below.

**Figure 14: Fire network bus configuration**

# Chapter 3
# Configuration and commissioning

**Summary**

This chapter includes information on how to configure and commission the control panel. Configuration is divided in basic configuration and advanced configuration options.

**Content**

The user interface 27
- User interface for two- and four-zone control panels 27
- User interface for eight-zone control panels 27

User levels 30
Configuration overview 32
- Configuration controls 32
- Common configuration tasks 34

Basic configuration 36
- The basic configuration menu 36
- Basic default configuration 38
- EN 54-13 supervision mode 39
- Panel mode 40
- Sounder delay 41
- Fire routing delay 42
- Extended fire routing delay 44
- Adding expansion boards 45
- Adding a fire network board 45

Advanced configuration 46
- The advanced configuration menu 46
- Sounder operation during a zone test 49
- Sounder re-sound 50
- Sounders silence disabled time 51
- Zone configuration 52
- Zone delay 53
- Zone type 54

Input configuration 55
Changing user level passwords 57
Auxiliary 24 V reset 58
Software, configuration, and serial number information 59
Expansion board configuration 61
Adding an expansion board 61
Expansion board configuration 61
Fire network and repeaters configuration 64
Basic configuration options 65
Advanced configuration options 67
Commissioning 71
Before commissioning the control panel 71
Commissioning the control panel 72
Functional tests 74
Response times 74

# The user interface

Consult the operation manual for details on the different controls and indications provided by the control panel.

**Note:** Regional variants include changes to interface buttons and LEDs –see “Regional variants of interface buttons and LEDs” on page 29.

## User interface for two- and four-zone control panels

**Figure 15: User interface for two- and four-zone control panels**

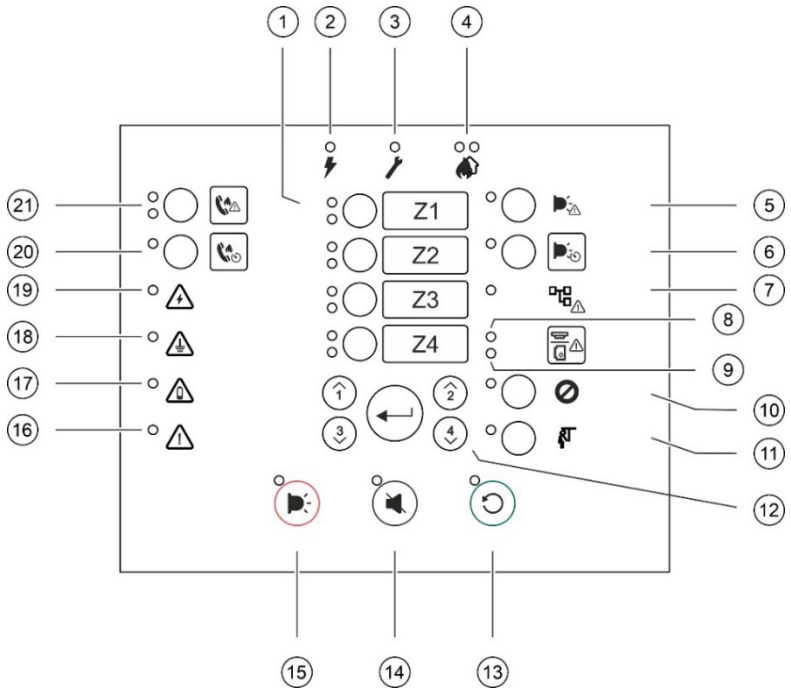


1. Zone buttons and LEDs (Z1, Z2, etc.)
2. Supply LED
3. General Fault LED
4. General Fire Alarm LEDs
5. Sounder Fault/Disable/Test button and LED
6. Sounder Delay button and LED
7. Networking Fault LED
8. Service Detector LED [1]
9. Expansion I/O Fault/Disabled LED
10. General Disable button and LED
11. General Test button and LED
12. Configuration controls
13. Reset button and LED
14. Panel Silence button and LED
15. Sounder Start/Stop button and LED
16. System Fault LED
17. Out of Service LED
18. Earth Fault LED
19. Supply Fault LED
20. Fire Routing Delay button and LED [2]
21. Fire Routing ON/ACK and Fault/Disable/Test button and LEDs [2]

Notes:

[1] Service Detector is only available for installations using compatible Aritech detectors.
[2] Two-zone control panels do not support fire routing or warning sounders for NEN 2535.

# User interface for eight-zone control panels

**Figure 16: User interface for eight-zone control panels**

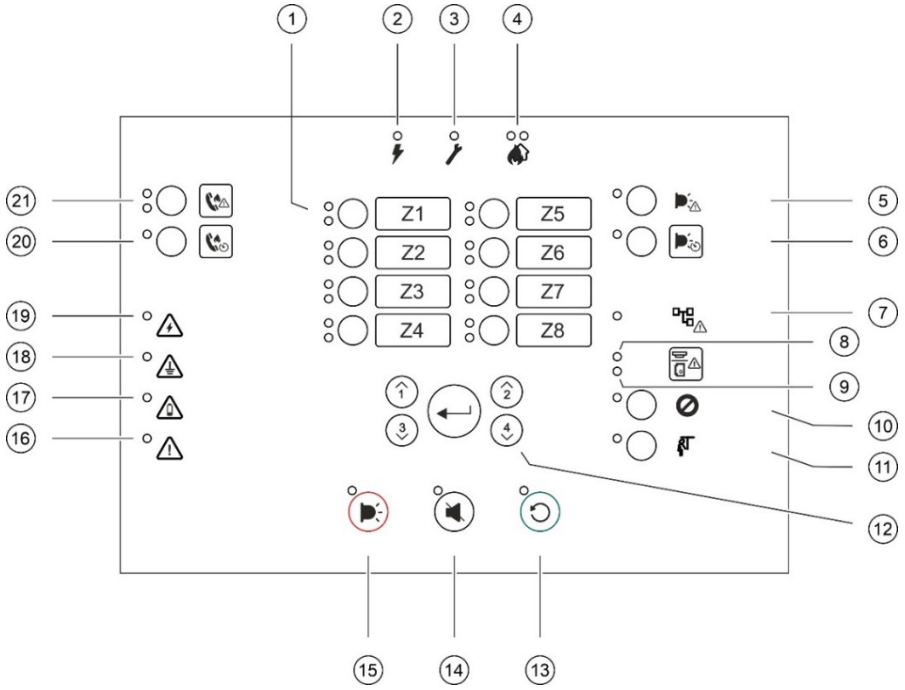


1. Zone buttons and LEDs (Z1, Z2, etc.)
2. Supply LED
3. General Fault LED
4. General Fire Alarm LEDs
5. Sounder Fault/Disable/Test button and LED
6. Sounder Delay button and LED
7. Networking Fault LED
8. Service Detector LED [1]
9. Expansion I/O Fault/Disabled LED
10. General Disable button and LED
11. General Test button and LED
12. Configuration controls
13. Reset button and LED
14. Panel Silence button and LED
15. Sounder Start/Stop button and LED
16. System Fault LED
17. Out of Service LED
18. Earth Fault LED
19. Supply Fault LED
20. Fire Routing Delay button and LED
21. Fire Routing ON/ACK and Fault/Disable/Test button and LEDs

Notes:

[1] Service Detector is only available for installations using compatible Aritech detectors.

## Regional variants of interface buttons and LEDs

Regional variants include the following changes to interface buttons and LEDs.

| Item | EN 54 | | NEN 2535 | | NBN S 21-100 | |
|---|---|---|---|---|---|---|
| 6 | | Sounder Delay | | Fire Protection Fault/Disable/Test | | Evacuation Sounder Delay |
| 8 | | Service Detector | | Fault Warning Fault/Disabled | | Service Detector |
| 15 | | Sounder Start/Stop | | Sounder Start/Stop | | Evacuation Start/Stop |
| 20 | | Fire Routing Delay | | Fire Routing Delay | | Warning Sounder Delay |
| 21 | | Fire Routing ON/ACK | | Fire Routing ON/ACK | | Warning Sounders Start/Stop |

# User levels

For your safety, access to some features of this product are restricted by user levels. The access privileges of each user level are described below.

The configuration tasks described in this chapter can only be performed by an installer user level, either basic or advanced. These user levels are reserved for the installation contractors authorized and responsible for the system installation and configuration.

### Public user

The public user level is the default user level.

This level allows basic operating tasks, such as responding to fire alarms, extinguishing events, or fault warnings at the control panel. No password is required.

### Operator user

The operator user level allows additional operating tasks that command the system or perform maintenance functions. It is reserved for authorized users who have been trained to operate the control panel.

Consult the operation manual for more details on the functions available for public user and operator user levels.

### Basic installer user

This user level is intended to quickly configure basic installation options that cover most applications.

### Advanced installer user

This user level is intended for installers that require configuring very specific applications where all the advanced features provided by the control panel are required. This level is also required for installers that require minor customizations after configuring a basic installation.

Passwords and indications for each user level are described in “User level passwords and indications” on page 31.

### User level passwords and indications

The default user level passwords and the corresponding LED and seven-segment display indications are shown in the table below. The seven-segment display is only visible when the control panel cover is removed. See Figure 1 on page 7 and Figure 2 on page 8.

**Caution:** Always change default passwords. To change a password, see “Changing user level passwords” on page 57.

**Table 15: User level passwords and indications**

| User level | Password | LED | Default display | Custom display |
|---|---|---|---|---|
| Public | None | None | None | None |
| Operator | 2222 | The Reset LED is steady | None | None |
| Basic installer | 3333 | The Reset LED is flashing | b A | n o |
| Advanced installer | 4444 | The Reset LED is flashing | P A | n o |

**Note:** If you have used advanced configuration options to set a custom input configuration, zone delay, zone configuration, or zone type, then the seven-segment display defaults to the custom display operating mode. See “Panel mode” on page 40 for details.

# Configuration overview

To facilitate rapid configuration of the most common tasks, configuration is divided into basic and advanced levels.

For basic configuration options, see “Basic configuration” on page 36. For advanced configuration options see “Advanced configuration” on page 46.

**Note:** The reset and panel silence functions are not available in configuration mode. To reset the control panel or silence the internal buzzer, first exit configuration mode. See “Common configuration tasks” on page 34 for instructions on exiting from configuration mode.

## Configuration controls

The control panel is configured using the front panel configuration controls and the seven-segment display. The configuration controls are also used to enter the user level password.

### The configuration controls

The configuration controls are located on the control panel interface.

**Figure 17: Front panel configuration controls**

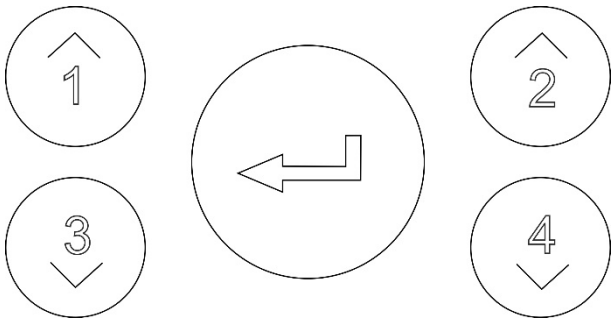


| Button | Function |
|---|---|
| 1 | Scrolls to the next configuration menu on the seven-segment display. |
| 2 | Scrolls to the next configuration value for the active menu on the seven-segment display. |
| 3 | Scrolls to the previous configuration menu on the seven-segment display. |
| 4 | Scrolls to the previous configuration value for the active menu on the seven-segment display. |
| Enter | Confirms a menu selection or a value selection entry. [1] |

[1] Panels configured as repeaters in a fire network normally display the status of several panels. Pressing this button for 3 seconds provides a temporary display of local panel status.

## The seven-segment display

The seven -segment display is only visible when the control panel cover is removed (see Figure 1 on page 7 and Figure 2 on page 8).

**Figure 18: The seven-segment display**

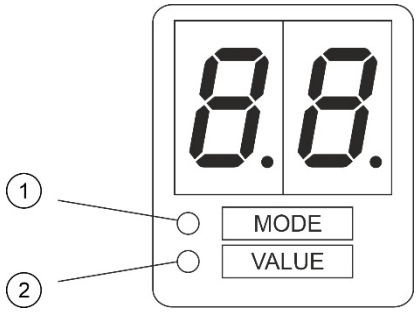


1. Mode LED
2. Value LED

**Table 16: Mode and value LEDs**

| LED | Indications |
|---|---|
| Mode | Select a *menu* using buttons 1 and 3 when this LED is steady.<br>— or —<br>Select a *submenu* using buttons 1 and 3 when this LED is flashing. |
| Value | Select a *value* using buttons 2 and 4 when this LED is steady |

## Common configuration tasks

**To enter configuration mode:**

1. Remove the control panel cover so that the seven-segment display is visible.
2. Enter a valid Installer user level password (3333 for basic configuration or 4444 for advanced configuration).
3. Press Enter.

When first entering configuration mode, the Mode LED on the seven-segment display is steady. For other indications see Table 16 on page 33.

**To select a menu:**

1. Select the required menu using the menu selection buttons (1 and 3).
2. Press Enter.

When a configuration menu has been selected, the Value LED on the seven-segment display is steady.

**To select a value:**

1. Select the required value using the value selection buttons (2 and 4).
2. Press Enter.

**To exit configuration mode and save your changes:**

1. Press Panel Silence.
2. Press Enter.

— or —

1. Set the display as shown below, and then press Enter.

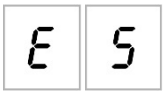


The Panel Silence LED flashes to confirm that a configuration change has been applied.

**Note:** Make all the configuration changes required before exiting configuration mode and saving your changes.

### To exit configuration mode without saving your changes:

1. Press Reset

— or —

1. Set the display as shown below, and then press Enter.

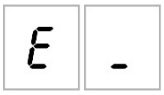

The control panel will exit configuration mode after 5 minutes if no button is pressed.

### Visual indications for current value and selected value

Current and selected values are indicated as follows.

**Table 17: Visible indications for values**

| Status | Indication |
|---|---|
| Current value | Both decimal points on the display are steady |
| New selected value | Both decimal points on the display are flashing |
| Other value | Both decimal points on the display are off |

### To restore the previous configuration:

1. Set the display as shown below, and then press Enter.

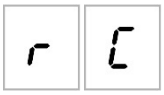

### To restore the factory configuration:

1. Set the display as shown below, and then press Enter.

# Basic configuration

The default password for basic configuration is 3333. After entering the password, the first displayed menu will be Basic default configuration (indicating basic installer user level). For more information see “User level passwords and indications” on page 31.

## The basic configuration menu

Configuration options for this menu are shown in the table below. More information for each option is included in the related topic.

**Table 18: The basic configuration menu**

| Display | Menu | Values | Operating mode |
|---|---|---|---|
| bA | Basic default configuration | See topic | All |
| SU | EN 54-13 supervision | ON/OFF | EN 54-2<br>EN 54-2 Evacuation<br>EN 54-2 Scandinavia<br>NBN S 21-100<br>NEN 2535<br>Custom |
| no | Panel mode | EN 54-2<br>EN 54-2 Evacuation<br>EN 54-2 Scandinavia<br>BS 5839-1 (No 2nd stage)<br>BS 5839-1 (2nd stage)<br>NBN S 21-100<br>NEN 2535<br>Custom | All |
| Sd | Sounder delay<br>(or Evacuation sounder delay for NBN S 21-100 mode) | 00 to 10 minutes | EN 54-2<br>EN 54-2 Evacuation<br>EN 54-2 Scandinavia<br>NBN S 21-100 |
| Fd | Fire routing delay<br>(or Warning sounder delay for NBN S 21-100 modse) | 00 to 10 minutes | EN 54-2<br>EN 54-2 Scandinavia<br>NBN S 21-100<br>NEN 2535 |
| FE | Extended fire routing delay | 00 to 10 minutes | EN 54-2<br>EN 54-2 Scandinavia<br>NEN 2535 |
| nn | Add an expansion board [1] | 00 to 04 modules | All |
| n1 | Fire network identifier [2] | 00 to 32 | All |

| Display | Menu | Values | Operating mode |
|---|---|---|---|
| r C | Restore previous configuration | N/A | All |
| F C | Restore factory configuration | N/A | All |
| E - | Exit without saving | N/A | All |
| E S | Exit and save | N/A | All |

[1] Additional menu options are available if one or more expansion boards are installed. See “Expansion board configuration” on page 61.
[2] Additional menu options are available if the panel is configured to be connected to the fire network (the fire network identifier is not 00). See “Fire network and repeaters configuration” on page 64.

For connecting the control panel to a fire network, an optional fire network board must be installed. For further details, see “Connecting a fire network” on page 23 and refer to the installation sheet for the network board.

## Basic default configuration

Use this menu to select common operating mode configuration presets. The default setting is 01 (EN 54-2, passive end-of-line).

**To select an operating mode configuration preset:**

1. Set the display as shown below, and then press Enter.

2. Select a value using the value selection buttons (2 and 4).

   See Table 19 below for descriptions of the presets.

3. Press Enter.
4. Save your changes.

A selected list of operating mode configuration presets is shown below. For a detailed list of all available configuration presets and characteristics, see Appendix A “Configuration presets” on page 91.

**Table 19: Common operating mode configuration presets (EN 54-13 disabled)**

| Display | Operating mode | Zone end-of-line | Zone type |
|---|---|---|---|
| 01 (default) | EN 54-2 | Passive | Mixed |
| 05 | EN 54-2 Evacuation | Passive | Mixed |
| 07 | EN 54-2 Scandinavia | Passive | Mixed |
| 11 | BS 5839-1 | Active | Mixed |
| 21 | NBN S 21-100 | Passive | Odd zones: Automatic<br>Even zones: Manual |
| 31 | NEN 2535 | Passive | Odd zones: Automatic<br>Even zones: Manual |

The operating mode is indicated by the first digit in the display and the configuration type by the second digit. If a custom configuration has been applied (via the advanced configuration menu), then the second digit is a zero, as shown below.

| Display | Configuration | Display | Configuration |
|---|---|---|---|
| 01 | EN 54-2 preset configuration | 00 | EN 54-2 custom configuration |
| 11 | BS 5839-1 preset configuration | 10 | BS 5839-1 custom configuration |
| 21 | NBN S 21-100 preset configuration | 20 | NBN S 21-100 custom configuration |
| 31 | NEN 2535 preset configuration | 30 | NEN 2535 custom configuration |

## EN 54-13 supervision mode

Use this menu to select the zone supervision mode (EN 54-13 supervision enabled or disabled). By default EN 54-13 zone supervision is disabled.

**Note:** EN 54-13 supervision mode is not available in BS 5839-1 mode or in any mode where CleanMe is enabled.

**To configure the supervision mode:**

1. Set the display as shown below, and then press Enter.

   S U

   The Sounder and Fire Routing Fault/Disable/Test LEDs and all zone LEDs flash quickly to indicate that the supervision mode configuration menu is active.
2. Select the supervision mode using the value selection buttons (2 and 4).
3. Press Enter.
4. Save your changes.

The available settings for this feature are shown below.

| Display | Description |
|---|---|
| 0 F | Default setting. EN 54-13 zone supervision is disabled and all outputs are configured as Class B. |
| A _ | EN 54-13 zone supervision is enabled and all outputs are configured as Class A. |

## Panel mode

Use this read-only menu to view the operating mode of the control panel.

### To view the operating mode:

1. Set the display as shown below, and then press Enter.

Display indications for each operating mode are shown below.

| Display | Operating mode |
|---|---|
| En | EN 54-2 |
| EE | EN 54-2 Evacuation |
| SC | EN 54-2 Scandinavia |
| b1 | BS 5839-1 (No second stage) |
| b2 | BS 5839-1 (second stage) |
| nb | NBN S 21-100 |
| nE | NEN 2535 |
| CU | Custom |

See Appendix A “Configuration presets” on page 91 for presets and default settings for each operating mode.

### Custom operating mode

A custom operating mode will be indicated if any of the following zone configuration settings are changed from the operating mode preset values:

- Zone delay
- Zone configuration
- Zone type
- Input configuration

The seven-segment display will alternate the custom and base operating mode indications, as shown above.

## Sounder delay

**Note:** Use this menu to configure evacuation sounder delays in NBN S 21-100 mode.

Use this menu to configure a sounder delay of up to 10 minutes in operating modes where the feature is available.

### Default delays

Default sounder delays for each operating mode are shown below.

**Table 20: Default sounder delay values**

| Operating mode | Default delay in minutes |
|---|---|
| EN 54-2<br>EN 54-2 Evacuation<br>EN 54-2 Scandinavia<br>BS 5839-1 | 00 |
| NBN S 21-100 | 01 |
| NEN 2535 | This feature is not available in this operating mode. |

### To configure a delay:

1. Set the display as shown below, and then press Enter.

   

   The Sounder Delay LED flashes quickly to indicate that the sounder delay configuration menu is active.
2. Select a delay value from 00 to 10 minutes using the value selection buttons (2 and 4).
3. Press Enter.
4. Save your changes.

Once configured the delay must be enabled at Operator user level.

### To enable a configured delay:

1. Exit Installer user level.
2. Enter the Operator user level password.
3. Press the Sounder Delay button.

A steady Sounder Delay LED indicates that the delay is enabled.

### Sounder outputs delay operation

The delay applies to the activation of sounder outputs only if *all* of the following are true:

- The delay is enabled
- The initiating device (detector or manual call point) is installed in an automatic zone or the initiating device is a detector installed in a mixed zone
- The initiating device is configured in a zone with delays configured (by default)
- Any input using the *delays off* function must not be active

If the delay is not enabled, the control panel activates sounder outputs immediately after the detection of the fire alarm.

## Fire routing delay

**Note:** Use this menu to configure warning sounder delays in NBN S 21-100 mode.

Use this menu to configure a fire routing delay of up to 10 minutes in operating modes where the feature is available.

### Default delays

The default fire routing delay for each operating mode is shown below.

**Table 21: Default fire routing delay values**

| Operating mode | Default delay in minutes |
|---|---|
| EN 54-2 Scandinavia | 01 |
| NEN 2535 | 01 |
| EN 54-2<br>NBN S 21-100 | 00 |
| EN 54-2 Evacuation<br>BS 5839-1 | This feature is not available in these operating modes. |

### To configure a delay:

1. Set the display as shown below, and then press Enter.

   

   The Fire Routing Delay LED flashes fast to indicate that the fire routing delay configuration menu is active.

2. Select a delay value from 00 to 10 minutes using the value selection buttons (2 and 4).

3. Press Enter.
4. Save your changes.

Once configured the delay must be enabled at Operator user level.

### To enable a configured delay:

1. Exit Installer user level.
2. Enter the Operator user level password.
3. Press the Fire Routing Delay button.

A steady Fire Routing Delay LED indicates that the delay is enabled.

### Fire routing delay operation

The delay applies to the activation of fire routing (if configured) only if *all* of the following are true:

- The delay is enabled
- The initiating device (detector or manual call point) is installed in an automatic zone (or the initiating device is a detector installed in a mixed zone)
- The initiating device is configured in a zone with delays configured (by default)
- A fire routing inhibit delay input is not activated (if configured)
- Any input using the *delays off* function must not be active

If the delay is not enabled, the control panel activates fire routing (if configured) immediately after the detection of the fire alarm.

# Extended fire routing delay

Use this menu to configure an extended fire routing delay of up to 10 minutes in operating modes where the feature is available.

### Default delays

The default extended fire routing delay for each operating mode is shown below.

**Table 22: Extended fire routing delay default values**

| Operating mode | Default delay in minutes |
|---|---|
| EN 54-2 Scandinavia | 03 |
| NEN 2535 | 03 |
| EN 54-2 | 00 |
| EN 54-2 Evacuation<br>BS 5839-1<br>NBN S 21-100 | This feature is not available in these operating modes. |

### To configure an extended delay:

1. Set the display as shown below, and then press Enter.

   The Fire Routing Delay LED flashes fast to indicate that the fire routing delay configuration menu is active.
2. Select a delay value from 00 to 10 minutes using the value selection buttons (2 and 4).

   This value must be greater than the configured fire routing delay.
3. Press Enter.
4. Save your changes.

Once configured the delay is enabled at the same time as the standard fire routing delay.

A steady Fire Routing Delay LED indicates that all configured fire routing delays are enabled.

### Extended fire routing delay operation

The same conditions required to apply a fire routing delay are applicable to apply an extended fire routing delay (i.e. delay enabled, automatic alarm in a zone with delays configured, no fire routing inhibit delay input activated, and no input using the delays off function activated).

If the conditions exist to apply the delay, fire routing and extended fire routing delays elapse concurrently when a fire alarm event is reported. After an alarm condition, the fire routing delay is the active delay to activate fire routing.

In NEN 2535 operating mode, the extended fire routing delay becomes the active delay to activate fire routing when sounders are stopped (by pressing the Sounder Start/Stop button) and remain stopped when the standard fire routing delay time has elapsed.

In EN 54-2, NEN 2535 and EN 54-2 Scandinavia operating mode, the extended fire routing delay becomes the active delay to activate fire routing when an extended fire routing delay switch (connected to an input configured accordingly) is activated while the standard fire routing delay elapses.

## Adding expansion boards

For information on how to add an expansion board to the fire system and how to configure it, see “Expansion board configuration” on page 61.

## Adding a fire network board

For information on how to add a fire network board to the fire system and how to configure it, see “Fire network and repeaters configuration” on page 64.

# Advanced configuration

The default password for advanced configuration is 4444. After entering the password, the first displayed menu is Advanced default configuration (indicating the advanced installer user level). For more information see “User level passwords and indications” on page 31.

## The advanced configuration menu

Configuration options for this menu are shown in Table 23 below. More information for each option is included in the related topic.

**Note:** All configurable options included in “Basic configuration” on page 36 are also available from the advanced configuration menu.

**Table 23: The advanced configuration menu**

| Display | Menu | Values | Operating mode |
|---|---|---|---|
| PA | Advanced default configuration | Configuration presets, as defined in “Basic default configuration” on page 38 | All |
| SU | EN 54-13 supervision | ON/OFF | EN 54-2<br>EN 54-2 Evacuation<br>EN 54-2 Scandinavia<br>NBN S 21-100<br>NEN 2535<br>Custom |
| no | Panel mode | EN 54-2<br>EN 54-2 Evacuation<br>EN 54-2 Scandinavia<br>BS 5839-1 (No 2nd stage)<br>BS 5839-1 (2nd stage)<br>NBN S 21-100<br>NEN 2535<br>Custom | All |
| Sd | Sounder delay<br>(or Evacuation sounder delay for NBN S 21-100 mode) | 00 to 10 minutes | EN 54-2<br>EN 54-2 Evacuation<br>EN 54-2 Scandinavia<br>NBN S 21-100 |
| Sb | Sounder operation during a zone test | ON/OFF | All |
| Sr | Sounder re-sound | ON/OFF | All |
| St | Silence sounders disabled time | 0 to 10 minutes | All |

| Display | Menu | Values | Operating mode |
|---|---|---|---|
| F d | Fire routing delay<br>(or Warning sounder delay for NBN S 21-100 mode) | 00 to 10 minutes | EN 54-2<br>EN 54-2 Scandinavia<br>NBN S 21-100<br>NEN 2535 |
| F E | Extended fire routing delay | 00 to 10 minutes | EN 54-2<br>EN 54-2 Scandinavia<br>NEN 2535 |
| n n | Add an expansion board | 00 to 04 modules | All |
| n 1 | Fire network identifier | 00 to 32 | All |
| S o | Firmware version | Read-only | All |
| C F | Configuration version | Read-only | All |
| C h | Configuration time stamp | Read-only | All |
| C d | Configuration date stamp | Read-only | All |
| 2 o | Zone configuration | Passive EOL<br>Active EOL<br>Unlatched<br>Passive EOL with CleanMe<br>Active EOL with CleanMe<br>Intrinsically-safe | All |
| 2 d | Zone delay | ON/OFF | All |
| 2 n | Zone type | Mixed<br>Automatic<br>Manual | All |
| 1 P | Input configuration | Remote reset<br>Delays off<br>Fire routing extended delay<br>Fire routing inhibit delay<br>Class change<br>Fault warning output open supervision (NEN 2535 only)<br>Fire routing acknowledgement (type 1, 100 seconds)<br>Fire routing acknowledgement (type 2, 240 seconds)<br>FBF interface (sounders disabled) | All |

| Display | Menu | Values | Operating mode |
|---|---|---|---|
| L 2 | User level 2 password | 0 to 4444 | All |
| L b | User level 3 basic password | 0 to 4444 | All |
| L A | User level 3 advanced password | 0 to 4444 | All |
| S n | Control panel PCB serial number | Read only | All |
| A r | Auxiliary 24 V reset | ON/OFF | All |
| r C | Restore previous configuration | N/A | All |
| F C | Restore factory configuration | N/A | All |
| E _ | Exit without saving | N/A | All |
| E S | Exit and save | N/A | All |

## Sounder operation during a zone test

Use this menu to configure the sounder operation during a zone test. The default setting for all operating modes is ON.

**To configure the sounder operation during a zone test:**

1. Set the display as shown below, and then press Enter.

   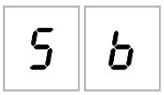
   

   The Sounders Start/Stop LED flashes fast to indicate that the sounder operation during a zone test configuration menu is active.
2. Select a value using the value selection buttons (2 and 4).
3. Press Enter.
4. Save your changes.

The available settings for this feature are shown below.

| Display | Description |
|---|---|
| On | The internal buzzer and sounders sound for 5 seconds when an alarm is activated in a zone test. |
| OF | The internal buzzer and sounders do not sound when an alarm is activated in a zone test. |

## Sounder re-sound

Use this menu to configure the sounder re-sound, on or off. This determines sounder operation in a fire alarm event when sounders have been silenced by pressing the Sounder Start/Stop button and a new alarm event is reported. The default setting is ON.

**To configure the sounder re-sound:**

1. Set the display as shown below, and then press Enter.

   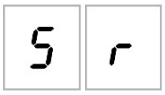
   

   The Sounders Start/Stop LED flashes fast to indicate that the sounder re-sound configuration menu is active.
2. Select a value using the value selection buttons (2 and 4).
3. Press Enter.
4. Save your changes.

The available settings for this feature are shown below.

| Display | Description |
|---|---|
| 0 n | The sounders re-sound if a new fire alarm event is reported from a different zone. |
| 0 F | The sounders do not re-sound if a new fire alarm event is reported from a different zone. |

Note: For new fire alarm events in the same zone, sounders will always re-sound if the first alarm is reported by a detector and the new alarm is reported by a manual call point.

## Sounders silence disabled time

**Note:** For control panels in basic evacuation mode, any configured fire sounders silence disabled time is ignored.

To prevent the immediate silencing of sounders when a fire alarm is first reported, the Sounder Start/Stop button may be temporarily disabled for a preconfigured period of time when a configured sounder delay is counting down.

The disable time starts to count down when the control panel enters fire alarm status and the configured sounder delay starts.

During the configured disable time the Sounder Start/Stop LED is off and the fire sounders cannot be silenced (before activation) by pressing the Sounder Start/Stop button.

In the time between the end of the configured disable time and the end of the configured sounder delay (when the Sounder Start/Stop LED is flashing), pressing the Sounder Start/Stop button silences sounders (before activation).

A configured sounder delay may still be cancelled while the delay is running (and sounders activated) by pressing the Sounder Delay button.

Use this menu to configure the time while sounders silence is disabled. The default setting is 1 minute.

### To configure the Sounders Silence Disabled Time:

1. Set the display as shown below, and then press Enter.

   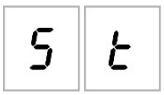
   

   The Sounders Start/Stop LED flashes fast to indicate that the Sounders Silence Disabled Time configuration menu is active.
2. Select a delay value from 1 to 10 minutes using the value selection buttons (2 and 4).
3. Press Enter.
4. Save your changes.

## Zone configuration

Use this menu to configure zone settings for each zone in your fire alarm system. The default setting for each operating mode is included in Appendix A “Configuration presets” on page 91.

### To configure the zone:

1. Set the display as shown below, and then press Enter.

   2 o

2. Select the zone (for example, zone 1), and then press Enter.

   0 1

   The Zone fault/test/disable LED flashes fast to indicate that the corresponding zone configuration menu is active.

3. Select a value using the value selection buttons (2 and 4).
4. Press Enter.
5. Save your changes.

The available settings for this feature are shown below.

| Display | Description |
|---|---|
| n | Passive end-of-line |
| A | Active end-of-line [1] |
| U | Unlatched (only available in BS 5839-1 mode) [1] |
| n C | Passive end-of-line with CleanMe [1][2] |
| A C | Active end-of-line with CleanMe [1][2] |
| I S | Intrinsically-safe zone [1][3] |

[1] Option not available if EN 54-13 supervision is enabled.
[2] Option not available if operating mode is NEN 2535
[3] By default, even zones are configured as manual and odd zones are set as automatic.

## Zone delay

Use this menu to configure zone delays (on or off), for each zone in your fire alarm system. If the zone delay is ON, for alarms reported from this zone, any output activation (sounders, fire routing and expansion board outputs) will consider delay before activation. The default setting for all zones is ON.

For a stand-alone fire panel, you specify the zone using the zone number.

When the control panel is in a fire network, unique zone numbers are created by defining a unique starting number for the first zone in each panel. For example, if the first zone is numbered 101, then zone 08 will have the number 108.

In a fire network, if the control panel is configured to activate with remote zones, you can enter “others” to select the delay for remote zones.

See the topic “Fire network and repeaters configuration” on page 64 for further details.

**To configure the zone delay:**

1. Set the display as shown below, and then press Enter.

   2 d

2. Select the zone (for example, zone 1), and then press Enter.

   0 1

   — or —

   Select “others” to select the remote zones.

   o t

   The Zone alarm LED flashes fast to indicate that the corresponding zone configuration menu is active.

3. Select a value using the value selection buttons (2 and 4).
4. Press Enter.
5. Save your changes.

The available settings for this feature are shown below.

| Display | Description |
|---|---|
| 0 n | Configured delays are applied when the alarm is reported from this zone. |
| 0 F | Configured delays are not applied. Outputs activate immediately when the alarm is reported from this zone. |

## Zone type

Use this menu to configure the zone type for each zone in your fire alarm system. The default setting for each operating mode is included in Appendix A “Configuration presets” on page 91.

### To configure the zone type:

1. Set the display as shown below, and then press Enter.

   2 n

2. Select the zone (for example, zone 1), and then press Enter.

   0 1

   The red Zone LED flashes fast to indicate that the corresponding zone configuration menu is active.

3. Select a value using the value selection buttons (2 and 4).
4. Press Enter.
5. Save your changes.

The available settings for this feature are shown below.

| Display | Description |
|---|---|
| n 1 | Mixed zone. The control panel automatically distinguishes between an automatic alarm (generated by a detector) and a manual alarm (generated by a manual call point fitted with a 100 Ω resistor). [1] |
| d E | Automatic zone. All fire alarms are treated as reported by a detector, even if the fire alarm is reported by a manual call point in the zone. |
| n C | Manual zone. All fire alarms are treated as reported by a manual call point, even if the fire alarm is reported by a detector in the zone. |

[1] This option is not available if EN 54-13 is enabled or an intrinsically-safe zone is configured.

## Input configuration

Use this menu to configure the functionality of INPUT1 and INPUT2. The default setting for each input is included in Appendix A “Configuration presets” on page 91.

**To configure an input:**

1. Set the display as shown below, and then press Enter.

   

2. Select the input (for example, INPUT1), and then press Enter.

   

3. Select a value using the value selection buttons (2 and 4).
4. Press Enter.
5. Save your changes.

The available settings for this feature are shown below.

| Display | Description | Operating mode |
|---|---|---|
| r S | Remote reset.<br>Input activation (transition) commands reset. | All |
| d F | Delays off<br>Input activation (transition) deactivates delays (equivalent to night mode).<br>Input deactivation (transition) activates delays (equivalent to day mode). | All |
| E d | Extended fire routing delay<br>Input active configures extended fire routing delay. | EN 54-2<br>EN 54-2 Scandinavian<br>NEN 2535 |
| I d | Fire routing inhibit delay<br>Input active deactivates fire routing delays. | EN 54-2<br>EN 54-2 Scandinavian<br>NEN 2535 |
| c C | Class change<br>Sounders are activated while the input is active | All |
| F S | Fault warning output open supervision<br>An inactive input indicates the fault warning output has an open circuit wiring fault. | NEN 2535 |
| A 1 | Fire routing acknowledgement (type 1, 100 seconds) [1][3]<br>An active input indicates acknowledge after fire routing is active. An active input in other condition generates a fire routing fault. | EN 54-2<br>EN 54-2 Scandinavian<br>NEN 2535 |

| Display | Description | Operating mode |
|---|---|---|
| A 2 | Fire routing acknowledgement (type 2, 240 seconds) [1][3]<br>An active input indicates acknowledge after fire routing is active. An active input in other condition generates a fire routing fault. | EN 54-2<br>EN 54-2 Scandinavian<br>NEN 2535 |
| F b | FBF interface (sounders disabled) [2] [3]<br>Active input disables sounders and silences the control panel. | EN 54-2<br>EN 54-2 Evacuation<br>EN 54-2 Scandinavian<br>NEN 2535<br>BS 5839-1 |

[1] May only be configured for one input per control panel.
[2] Regional fire brigade panels. May only be configured for one input per control panel.
[3] Supervision for wiring open and short conditions available. A 15 kΩ end-of-line is required.

## Changing user level passwords

**Caution:** To avoid unauthorised access, always change default passwords.

Use the corresponding menu option (shown below) to change the default user level passwords.

| | |
|---|---|
| L 2 | Operator user level password |
| L b | Basic installer user level password |
| L A | Advanced installer user level password |

**To change the first two digits of a user level password:**

1. Set the display for the desired user level password, and then press Enter.
2. Set the display as shown below, and then press Enter.

   U P

3. Select a value using the value selection buttons (2 and 4).
4. Press Enter.
5. Save your changes.

**To change the last two digits of a user level password:**

1. Set the display for the desired user level password, and then press Enter.
2. Set the display as shown below, and then press Enter.

   L 0

3. Select a value using the value selection buttons (2 and 4).
4. Press Enter.
5. Save your changes.

## Auxiliary 24 V reset

Use this menu to configure the auxiliary 24 V reset setting, on or off. The default setting is OFF.

**To configure the 24 V reset:**

1. Set the display as shown below, and then press Enter.

   A r

2. Select a value using the value selection buttons (2 and 4).
3. Press Enter.
4. Save your changes.

The available settings for this feature are shown below.

| Display | Description |
|---|---|
| 0 n | Resetting the control panel resets the AUX 24V output. |
| 0 F | Resetting the control panel does not reset the AUX 24V output. |

## Firmware, configuration, and serial number information

Use the corresponding menu option (shown below) to display firmware, configuration, and serial number information. These details may be required for troubleshooting and technical support.

| | |
|---|---|
| S o | Firmware version (control panel, expansion board or fire network board) |
| C F | Configuration version |
| C h | Configuration time stamp |
| C d | Configuration date stamp |
| S n | Serial number (control panel, expansion board or fire network board) |

The following submenus are available for firmware version and serial number menus:

| Display | Description |
|---|---|
| F P | Display the firmware version or serial number for the control panel |
| n A | Display the firmware version or serial number for expansion board A |
| n b | Display the firmware version or serial number for expansion board B |
| n c | Display the firmware version or serial number for expansion board C |
| n d | Display the firmware version or serial number for expansion board D |
| n b | Display the firmware version or serial number for the network board |

### To check the firmware version:

1. Set the display as shown below, and then press Enter.

   5 o

2. Select a value (fire panel, expansion board or fire network board) using the value selection buttons (2 and 4).
3. Press Enter.
4. The firmware version is displayed in three consecutive segments, as shown below.

| Segment | Description | Example |
|---|---|---|
| 1 1 | Is the major release identifier | 0 2 |
| r r | Is the minor release identifier | 0 3 |
| c c | Is the version cycle number | 0 0 |

In the above example, the reading is for firmware version 2.3.0.

# Expansion board configuration

## Adding an expansion board

Use this menu, available from the basic or advanced configuration menus, to configure the number of installed expansion boards. The default value is 00.

**To add an expansion board:**

1. Set the display as shown below, and then press Enter.

   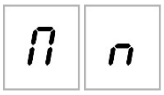

   The Expansion I/O Fault/Disabled LED flashes fast to indicate that the module configuration menu is active.
2. Select a value using the value selection buttons (2 and 4).
3. Press Enter.
4. Save your changes.

The maximum number of expansion boards that can be installed is shown below.

**Table 24: Maxumum number of expansion boards**

| | |
|---|---|
| Two- and Four-zone control panels | Up to two expansion boards |
| Eight-zone control panel | Up to four expansion boards [1] |

[1] Note: For regulatory compliance, when a fire network board is installed, make sure your configuration does not exceed the usage of three expansion board modules.

## Expansion board configuration

### Expansion board labels

For configuration purposes expansion boards are labeled A and B (for two- and four-zone control panels) or A, B, C, and D (for eight-zone control panels).

The label for a given module is defined by its position (left to right) in the control panel cabinet, The first expansion board installed is module A, the second B, etc.

See your expansion board installation sheet for installation instructions.

### Expansion board function and delay configuration

Once an expansion board is installed and added to the control panel configuration, the following additional configuration options appear on the basic and advanced configuration menus.

**Note:** These configuration options are repeated for each of the installed expansion boards (A, B, C, and D).

**Table 25: Expansion board A configuration options**

| Display | Description | Value |
|---|---|---|
| nA | Module A function | 01 to 92 [1] |
| A1 | Module A output 1 delay | 00 to 10 minutes |
| A2 | Module A output 2 delay | 00 to 10 minutes |
| A3 | Module A output 3 delay | 00 to 10 minutes |
| A4 | Module A output 4 delay | 00 to 10 minutes |

[1] Available values depend on the type of expansion board installed and the supervision selected. See Appendix A “Configuration presets” on page 91.

### Expansion board function

Use this menu to configure the expansion board function. The default value depends on panel configuration. For most configurations, the default value is 01. For two-zone panels, or panels configured for EN 54-13, the default is 05. For the available presets, see Appendix A “Configuration presets” on page 91.

### To configure the expansion board function:

1. Set the display as shown below, and then press Enter.

   nA

   The Expansion I/O Fault/Disabled LED on the control panel interface and the ON LED on the expansion board flashes fast to indicate that the module function configuration menu is active.
2. Select a value from 01 to 92 using the value selection buttons (2 and 4).
3. Press Enter.
4. Save your changes.

### Expansion board output delay

Use this menu to configure an expansion board output delay of up to 10 minutes, where the feature is available.

### To configure an expansion board output delay:

1. For output 1 on expansion board A, set the display as shown below, and then press Enter.

   

   The Expansion I/O Fault/Disabled LED on the control panel interface and the Activated LED on the expansion board flashes fast to indicate that the module delay menu is active.
2. Select a value from 00 to 10 using the value selection buttons (2 and 4).
3. Press Enter.
4. Repeat steps 1 to 3 as required for each output (1 to 4) on each installed module (A, B, C, and D) where a delay is required.
5. Save your changes.

# Fire network and repeaters configuration

This section describes how to configure a fire network of conventional control panels in order to:

- Connect repeaters (any conventional control panel can be configured to operate as a repeater)
- Create a fire network of conventional control panels, when you need additional conventional zones in your system
- Create a network including compatible addressable control panels, to add more features to your fire detection and alarm system (e.g. logging events, complex output activation controlled by the addressable system, remote monitoring)

When a conventional panel is connected to a fire network it normally displays the status of one or more panels in the network (depending on repeater configuration settings). To display information for only that panel, press the Enter key for 3 seconds to provide a temporary, 30-second display of the local status indications.

## Basic configuration options

The following table shows the options for creating basic fire network (firenet) configurations.

**Table 26: Basic configuration options for the fire network**

| Display | Description | Value |
|---|---|---|
| n 1 | Firenet identifier for the panel (the panel node number in the network) | 00 to 32<br>00 = Stand-alone (no networking)<br>Default: 00 |
| n n | Firenet number of nodes (the number of nodes in the network) [1] | 02 to 32<br>Default: 02 |
| n 2 | Firenet initial zone number [2] | 0001 to 9999<br>The number has four digits. Identified by position, these are: 1234.<br>Press Up to enter the first two digits of the number (positions 1 and 2).<br>Press Down to enter the last two digits of the number (positions 3 and 4). |
| | — or — | |
| | Firenet initial panel number to be repeated [2] | 01 to 32<br>Default: 01 |

[1] Basic configuration uses consecutive numbers beginning with 1 and ending with the number entered here. Advanced configuration allows the use of specific, nonsequential node numbers. When the system has an advanced, custom pattern of node numbers, the displayed value for nn is “Cu”.
[2] Depending on the advanced setting Firenet repeater type (nr), this setting configures the initial zone repeated or the initial panel repeated.

A *basic fire network* is either a panel and a repeater, or a 16-zone virtual panel composed of two 8-zone panels.

### To configure a basic fire network:

1. Activate networking by selecting the node number in the fire network.

   The value of nI changes from 0 to 1 for the control panel, and from 0 to 2 for the repeater panel.

   If nI is not 0 (networking activated), a network fault is reported if the network card is not present.

   The Network Fault LED blinks every 10 seconds to indicate that the panel is connected to the network without faults.

2. Select the number of control panels in the network.

   This is not required when you have two panels (i.e. a panel and a repeater).

   If you select 5, panel IDs 1 to 5 will have to be present so as not to have a network fault indication.

   Use advanced settings if you need to configure a network with other node IDs and you need specific control and repeater settings.

3. Select the initial zone in the fire network.

   This is not required if the two panels will use the same zone numbers starting with zone 1 (i.e. a panel and a repeater).

Zones are global. A remote zone event in a zone number which is also used in the local control panel will generate a response as if the event was generated by a local zone. Example: In a two-zone panel with initial zone 10, zones 10 and 11 are available and any event in zones 10 and 11 in any other control panel in the network will have the same effect in the panel as a local event on these zones.

Therefore, change this setting if you want to keep activations and indications independent in different control panels. Example: In a 16-zone virtual panel, eight-zone panel 1 can keep initial zone with the default value (1) and the eight-zone panel 2 requires changing initial zone from 1 to 9.

Note that this setting can be used to configure control panels to repeat the status of control panels in the fire network with the zone LEDs. Consult fire network advanced configuration settings for further details.

Basic fire network configuration will have the default fire network settings or the ones previously configured in the advanced fire network configuration options.

Default fire network settings are as follows:

- Both control panels will control each other (fire panel and repeater panel).
- The network topology will be class B.
- The repeater will repeat zones, not control panels.
- The fire panel will repeat faults in the repeater panel.
- The fire panel will enter alarm and generate activations with remote zones.
- The fire panel will control its outputs (no addressable system in the network).

## Advanced configuration options

The following table shows the options (available to an advanced configuration user) for creating an advanced fire network configuration.

**Table 27: Advanced configuration options for the fire network**

| Display | Description | Value |
|---|---|---|
| n 1 | Firenet identifier | 0 to 32<br>0: Stand-alone (no networking)<br>Default: 0 |
| n n | Firenet number of nodes [1] | 2 to 32<br>Default: 2 |
| n 2 | Firenet initial zone number when the firenet repeater type (nr) = 2n | 0001 to 9999<br>The number has four digits. Identified by position, these are: 1234.<br>Press Up to enter the first two digits of the number (positions 1 and 2).<br>Press Down to enter the last two digits of the number (positions 3 and 4). |
| | — or — | |
| | Firenet initial panel number to be repeated when the firenet repeater type (nr) = Pn | 01 to 32<br>Default: 01 |
| n C | Firenet global controls | On/ OFF<br>Default: On |
| n L | Firenet loop class | A/ B<br>Default: B |
| n P | Firenet process remote zones | On/ OFF<br>Default: On |
| n r | Firenet repeater type | 2n = Zones Repeater<br>Pn = Panels Repeater<br>Default: 2n |
| n n | Firenet map | Submenu: 1 – 32<br>Values: On/OFF<br>Default: ON for nodes 1 and 2, OFF for the rest |

| Display | Description | Value |
|---|---|---|
| r n | Firenet repeater map | Submenu: 1 – 32<br>Values: On/OFF<br>Default: ON for nodes 1 and 2, OFF for the rest |
| n 0 | Firenet remote output control | On/ OFF<br>Default: OFF |

[1] The basic configuration setting can be replaced by a customized set of specific panels for communication, called a firenet map (nM), and a set of panels to be repeated, called a firenet repeater map (rM). If the configuration is changed by modifying nM or rM, the value displayed for firenet number of nodes (nn) is Cu, indicating a custom network configuration.

## Configuring firenet and repeater maps

If the control panels in the system do not have all the node IDs numbered consecutively (starting from 1) or if the control panels do not repeat information from all other panels, then configure the nM (Firenet map) and rM (Firenet repeater map).

Firenet map (nM) configuration

Any control panel in the fire network can be configured to show remote zone events and react as if the events were coming from the local zones, for the zones that are within the range of the panel. The range of zones in the panel is determined with the initial zone (offset) and the control panel type. The global zone numbers can be 1 to 9999. This means a two-zone panel initial zone can be 1 to 9998 and an eight-zone panel with the initial zone being 100 has a zones range from 100 to 107.

The firenet map (nM) defines all the control panels that communicate with the configured panel. This lets you create subnetworks in the fire network. For example, if you have four panels in a fire network as follows:

- Panel ID 1 with nM active for nodes 1 and 2
- Panel ID 2 with nM active for nodes 1 and 2
- Panel ID 20 with nM active for nodes 20 and 32
- Panel ID 32 with nM active for nodes 20 and 32

Panels 1 and 2 will see each other in one sub-network and panels 20 and 32 will be each other in a different sub-network. Only a firenet wiring open-loop fault for class A networks will be shared between the two sub-networks.

Repeater map (rM) configuration

Any control panel in the fire network can repeat the information of other nodes that form part of its firenet map.

A unique panel or several panels can be repeated at the same time (including addressable panels) by defining the repeater map.

By default, the basic setting to establish the number of nodes (nn) will set the control panel to activate in the repeater map (rM) the same control panels in the firenet map. (i.e. The control panels by default will repeat all the information of all other control panels in the fire network.)

The indications will show the logic OR function of the local indication together with the same indication on other remote panels being repeated. If control panels show different status, the control panel with higher priority takes precedence (i.e. if control panel 1 has sounders on delay and control panel 2 sounders on, the indication of a third panel repeater will show sounders on).

All indications received that are not available in the repeater panel for display will be ignored.

Examples:

- A conventional repeater panel can repeat an analogue panel and many indications are not available for display.
- A two-zone control panel could be configured to repeat an eight-zone panel. Zones 3 to 8 will not be available for display.

Conventional systems can be configured to repeat control panels status information instead of zones status information, in the zone LED indications. Consult the Repeater type configuration (nr) setting.

### Selecting control panel commands

Select the control panel commands (e.g. reset, silence/resound sounders, panel silence, cancelling delays) that will be local or global. This is sent to all other control panels in its firenet map.

By default, nC is set to Yes so that controls are local but also sent to the network.

**Note:** Local or global controls does not apply to disable/enable and test commands. These are always local and sent to the control panels being repeated.This featureprovides more flexibility to configure disable/enable and test of zones, sounders, fire routing and fire protection.

Examples: If we disable zone 1 in control panel 1 and control panel 1 repeats control panel 2, the zone 1 in control panel 2 will also be disabled (shared zone completely disabled). If we disable zone 1 in control panel 1 but control panel 2 is not repeated, zone 1 in panel 2 will not be disabled. (This allows disabling only part of the shared zone).

### Selecting the loop class

Select the loop class (nL) to configure the panel according to the wiring topology selected: class A (ring) or class B (bus).

Class A is recommended to provide redundancy in communication path. Class B can only be used for repeaters without control requirements.

By default, the basic settings use class B for basic repeater functionality.

### Selecting processing for remote zones in alarm

Select the setting to process (or not process) remote zones in alarm (nP).

This setting lets you decide whether the control panel enters alarm and reacts accordingly or not, with any remote zone outside its range of zones. This option lets you:

- Create large conventional systems (e.g. 10, 12, 16 or more zones) where each node has different global zones to indicate only the local zone in alarm
- Create systems where alarm indications have to be local to the panel (nP should be inactive)

By default, process remote zone alarms (nP) is active (ON).

### Specify the firenet repeater type

Select the firenet repeater type setting (nr) if you want to use the repeater to display panel status instead of zone status information. (nr = Pn).

When the control panel is configured to repeat the status of other panels, the zone indications display global panel status information: the red zone LED will indicate the panel ID in the network is in alarm (automatic or manual) and the yellow zone LED will indicate the panel ID is in fault, disable or test.

By default, zone repeaters are used (nr = 2n)

### Select remote output control

Set firenet remote output control (nO) ON if you want an addressable compatible control panel in the fire network to command the outputs of the conventional panel (sounders, fire routing, fire protection, fault warning output, and expansion board outputs) with advanced programming options.

Consult the addressable control panel documentation (including its configuration utility software) if you require this type of advanced configuration.

If the control panel is configured for remote output control, it will no longer activate outputs based on its own logic and will only activate outputs with commands coming from the fire network.

This mode of operation is fail-safe i.e. if the control panel detects a fire network fault, the outputs will activate with the local logic or the remote commands.

By default, firenet remote output control is off for standalone applications or pure conventional fire networks where the control panel controls its outputs.

# Commissioning

## Before commissioning the control panel

Before commissioning the control panel, make sure that:

- The control panel has been correctly installed
- The mains power is 110 VAC or 230 VAC, is connected correctly, and complies with all requirements described in “Connecting the mains power supply” on page 21
- There are no short or open circuits in any of the zone circuits
- All zones have the correct end-of-line termination, as described in “Terminating zones” on page 14
- All manual call points have the correct resistance for alarm identification, as described in “Connecting manual call points” on page 15
- Polarity is observed for all sounder circuits and that all end-of-line resistors are installed, as described in “Connecting sounders or other notification devices to supervised outputs” on page 19
- Any optional equipment installed (fire routing, alarm, and fault relays, etc.) is correctly connected
- The batteries are connected correctly, and comply with all requirements described in “Connecting the batteries” on page 22
- All fire alarm system configuration complies with the corresponding operating mode and local regulations.

## Commissioning the control panel

Once all installation, connection, and configuration requirements have been checked as described above, the control panel can be powered up.

### Normal startup

After starting up the control panel, normal status (standby) is indicated as follows:

- The Supply LED is steady
- The Sounder Delay LED is steady (if a delay has been enabled)
- The Fire Routing Delay LED is steady (if a delay has been enabled)

If any other indicators are on, check your installation thoroughly before proceeding.

### Fault startup

In accordance with EN 54-2, the control panel has a special startup sequence used after an internal fault has been detected by the control panel.

This is indicated as follows:

- The General Fault LED flashes fast
- The System Fault LED flashes slow

When this happens:

1. Enter the Operator user level password.
2. Press the Reset button to reset the control panel.

If the fault status persists after reset, the control panel aborts the startup sequence and turns on the System Fault LED.

When this happens, check all control panel connections and configuration, as described in “Before commissioning the control panel” on page 71.

## Battery startup

To power up the control panel from the batteries, press the battery start button on the control panel PCB (marked as BAT. START, see Figure 19 below). Keep the button pressed for approximately 5 seconds.

**Figure 19: Battery startup button**

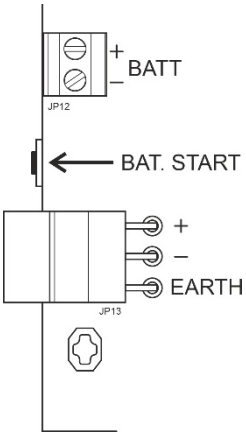

## Functional tests

Create a short and open circuit in the zone to test fault reporting for each.

Activate a manual call point to test manual alarm reporting. The control panel should override any configured delays and activate alarm notification devices and fire routing (where applicable) immediately.

Activate a detector to test automatic alarm reporting. The control panel should initiate any configured delays and activate alarm notification devices and fire routing (where applicable) once the delay time has elapsed.

Using a multimeter, verify that the fault relay is activated when a fault is reported and that the alarm relay is activated when an alarm is reported.

## Response times

Response times for standard events are as follows.

**Table 28: Response times for standard events**

| Event | Response time |
|---|---|
| Alarm | Less than 3 seconds |
| Zone fault | Less than 30 seconds |
| Sounder fault | Less than 30 seconds |
| Fire routing fault | Less than 30 seconds |
| Expansion board fault | Less than 100 seconds |
| Network fault | Less than 100 seconds |
| Earth fault | Less than 100 seconds |
| Battery charger fault | Less than 100 seconds |
| No batteries found fault | Less than 3 minutes |
| Mains fault | Less than 3 minutes |
| Out of service fault | Less than 100 seconds |
| Fuse/protection fault | Less than 3 minutes |
| System fault | Less than 100 seconds |
| Battery high resistance fault | Less than 4 hours |

# Chapter 4
# Maintenance

**Summary**

This chapter includes information on fire alarm system maintenance and battery maintenance.

**Content**

Fire alarm system maintenance 76
- Quarterly maintenance 76
- Annual maintenance 76
- Cleaning the control panel 76

Battery maintenance 77

# Fire alarm system maintenance

Perform the following maintenance tasks to ensure that the fire alarm system works correctly and complies with all required European regulations.

**Note:** Before performing any tests, ensure that fire routing (if configured) is disabled or that the fire brigade has been notified.

## Quarterly maintenance

Test at least one device per zone and verify that the control panel responds to all fault and alarm events. The control panel power supply and battery voltage should be checked.

## Annual maintenance

Test all system devices and verify that the control panel responds to all fault and alarm events. All electrical connections must be visually inspected to make sure that they are securely fastened, that they have not been damaged, and that they are appropriately protected.

## Cleaning the control panel

Keep the outside and inside of the control panel clean. Carry out periodic cleaning using a damp cloth for the outside. Do not use products containing solvents to clean the control panel. Do not clean the inside of the cabinet with liquid products.

# Battery maintenance

## Compatible batteries

The control panel requires two 12V, 7.2 or 12 Ah rechargeable sealed lead-acid batteries. Compatible batteries for this product are shown in the table below.

**Table 29: Compatible batteries**

| Model | Battery type | Recommended batteries |
|---|---|---|
| Two- and four-zone control panels | 12V, 7.2 Ah | Aritech BS127N-A (7.2 Ah)<br>Fiamm FG20721/2 (7.2 Ah)<br>Yuasa NP7-12 (7.0 Ah) |
| Eight-zone control panel | 12V, 7.2 Ah or 12V, 12 Ah | Aritech BS127N-A (7.2 Ah)<br>Aritech BS130N (12 Ah)<br>Fiamm FG20721/2 (7.2 Ah)<br>Fiamm FG21201/2 (12 Ah)<br>Yuasa NP7-12 (7.0 Ah)<br>Yuasa NP12-12 (12 Ah) |

## Troubleshooting batteries

Battery supply and battery fuse faults are indicated by a flashing Supply Fault LED. If this LED is flashing, check the following:

- That the battery cables are in good condition
- That the battery cables are connected securely and correctly at the battery and at the control panel PCB

If the cables are in good condition and all connections are correct, then the batteries should be replaced immediately.

## Replacing batteries

Batteries must be replaced periodically as recommended by the battery manufacturer. The useful life of the battery is approximately four years. Avoid the total discharge of the batteries. Always use the recommended replacement batteries.

### To replace the batteries:

1. Disconnect and remove the existing batteries from the cabinet.
2. Install and connect the replacement batteries using the bridge provided. Observe correct polarity.
3. Dispose of the batteries as required by local or regional regulations.

# Chapter 5
# Technical specifications

**Summary**

This chapter includes technical specifications for your fire alarm control panel.

**Content**

Zone specifications 80
Input and output specifications 81
Power supply specifications 83
Mechanical and environmental specifications 84
Fire network specifications 85
Cabinet drawings and dimensions 86

# Zone specifications

**Table 30: General zone specifications**

| | |
|---|---|
| Zone output voltage | |
| Nominal | 22 VDC |
| Maximum | 24 VDC |
| Minimum | 18 VDC |
| Maximum current consumption per zone circuit | 65 mA |
| Default zone configuration | |
| EN 54 | Passive end-of-line |
| NEN 2535 | Passive end-of-line |
| NBN S 21-100 | Passive end-of-line |
| BS 5839-1 | Active end-of-line |
| Default zone termination | |
| EN 54 | 4.7 kΩ end-of-line resistor |
| NEN 2535 | 4.7 kΩ end-of-line resistor |
| NBN S 21-100 | 4.7 kΩ end-of-line resistor |
| BS 5839-1 | Active end-of-line device |
| EN 54-13 supervision enabled | EOL-Z end-of-line device |
| Intrinsically safe | 4.7 kΩ end-of-line resistor |
| Number of detectors per zone [1] | |
| NC Series | 32 max. |
| Aritech 700 Series | 20 max. [2] |
| Kilsen KL700 Series | 20 max. [2] |
| Ziton Z600 Series | 32 max. [2] |
| Other detectors | 32 max. [2][3] |
| Number of manual call points per zone | 32 max. [4] |

[1] Or as defined by local standards. Maximum of 30 detectors for NBN S 21-100 installations.
[2] Systems using these detectors are not EN 54-13 compliant.
[3] Provided that the detectors meet the required zone specifications given here.
[4] Figures based on EN 54-2. The maximum number of devices may differ for other standards. For example, NBN S 21-100 indicates a maximum of 30 detectors or 10 manual call points per zone circuit.

**Table 31: Mixed zone specifications** [1]

| | |
|---|---|
| Max. resistance per zone | 40 Ω |
| Max. capacitance per zone | 500 nF |
| Nominal impedance | |
| Detector | 160 Ω to 680 Ω ±5% |
| Manual call point | 100 Ω ±5% |
| Detector alarm reference range | |
| Zone voltage | 6.5 V to 14 V |
| Zone impedance | 145 Ω to 680 Ω |
| Manual call point alarm reference range | |
| Zone voltage | 3 V to 6.5 V |
| Zone impedance | 75 Ω to 144 Ω |

| | |
|---|---|
| Short circuit reference range | |
| Zone voltage | < 3 V |
| Zone impedance | < 55 Ω |
| Open circuit reference range | |
| Zone impedance | > 8 kΩ |
| Zone device current consumption | ≤ 2.6 mA |

[1] Mixed zones are not allowed on installations requiring EN 54-13 compliance or intrinsically-safe zones

**Table 32: Automatic and manual zone specifications**

| | **Standard / BS 5839-1** | **EN 54-13** | **Intrinsically safe** [1] |
|---|---|---|---|
| Resistance per zone | 55 Ω max. | 50 Ω max. | 55 Ω max. |
| Capacitance per zone | 500 nF max. | 500 nF max. | 500 nF max. |
| Nominal alarm impedance | 100 to 680 Ω ±5% | 100 to 520 Ω ±5% | 250 to 560 Ω ±5% |
| Alarm reference range | | | |
| Zone voltage | 3 to 14 V | 3.1 to 16.9 V | 12.8 to 17 V |
| Zone impedance | 75 to 680 Ω | 90 to 900 Ω | 160 to 900 Ω |
| Short circuit reference range | | | |
| Zone voltage | < 3 V | < 3.1V | < 11.9 V |
| Zone impedance | < 55 Ω | < 50 Ω | < 80 Ω |
| Open circuit reference range | | | |
| Zone impedance | > 8 kΩ | N/A | > 11 kΩ |
| Zone device current draw | ≤ 2.6 mA | N/A | < 1.81 mA |
| Zone voltage | 20.6 to 23.5 V | 19.2 to 23.5 V | > 21.3 V |
| High impedance fault | N/A | 16.9 to 17.2 V | N/A |

[1] Values are referenced to panel zone input terminals.

# Input and output specifications

**Table 33: Unsupervised inputs**

| | |
|---|---|
| Cable resistance | |
| Activation input value | ≤ 9k Ω ±10% |
| Deactivation input value | > 9k Ω ±10% |
| Input type | Unsupervised, activated with a passive impedance (usually a relay contact) |
| Sourced current | 1 mA max. (for activation with short circuit contact) |
| Voltage between terminals | 28 V max. (for deactivation with open circuit) |

**Table 34: Supervised inputs** [1]

| | |
|---|---|
| Cable resistance | |
| Short circuit | ≤ 220 Ω |
| Active | < 220 Ω to 8 kΩ |
| High-impedance fault | < 8 kΩ to 10 kΩ |
| Standby | < 10 kΩ to 20 kΩ |
| Open circuit | > 20 kΩ<br><br>Note: For EN 54-13 compliance, the active impedance should be from 220 Ω to 3.9 kΩ. |
| Sourced current | 1 mA max. (for activation with short-circuit contact) |
| Voltage between terminals | 28 V max. (for deactivation with open circuit) |

[1] Fire routing acknowledgement inputs

**Table 35: Output specifications**

| | |
|---|---|
| Output termination | |
| Class B outputs (default) | 15 kΩ 5% end-of-line resistor |
| Class A outputs | 4.7 kΩ 1/4W 1% end-of-line resistor |
| Sounder/fire routing/fault warning outputs [1] | |
| Supervised | For open and short circuit |
| Current per output (two-four-zone) | 250 mA max. |
| Current per output (eight-zone) | 500 mA max. at 25ºC<br>385 mA max. at 40ºC |
| Voltage in standby (EN 54-13 disabled) | −11.5 VDC max. |
| Voltage in standby (EN 54-13 enabled) | −8.4 VDC max. |
| Voltage in alarm | +21 VDC min.<br>+28 VDC max. |
| Alarm relay output | |
| Number of potential-free outputs | 1 |
| Commutation current | 2 A at 30 VDC max. |
| Fault relay output | |
| Number of potential-free outputs | 1 |
| Commutation current | 2 A at 30 VDC max. |
| Default state | Energized (fail to safe) |
| Auxiliary 24 VDC output | |
| Voltage | 24 VDC nominal<br>28 VDC max.<br>21 VDC min. |
| Current | 250 mA max. |

[1] The number of available outputs depends on the control panel model, supervision type, and operating mode. See “Operating mode presets” on page 92 for more information.

# Power supply specifications

**Table 36: Mains supply specifications**

| | |
|---|---|
| Operating voltage | 110 VAC / 60 Hz or 230 VAC / 50 Hz |
| Rated current (two- and four-zone control panels) | |
| 110 VAC | 2 A |
| 230 VAC | 2 A |
| Rated current (eight-zone control panels) | |
| 110 VAC | 3.15 A |
| 230 VAC | 1.5 A |
| Voltage tolerance | +10% / −15% |
| Mains fuse | |
| 110 VAC | T 3.15A 250V |
| 230 VAC | T 2A 250V |

**Table 37: 24 VDC power supply specifications**

| | |
|---|---|
| Two- and four-zone control panels | |
| DC voltage | 24 V |
| Rated current | 2 A |
| Current range | 0 to 2 A |
| Rated power | 50 W |
| Voltage tolerance | ±2% |
| Eight-zone control panel | |
| DC voltage | 24 V |
| Rated current | 4 A |
| Current range | 0 to 4 A |
| Rated power | 100 W |
| Voltage tolerance | ±2% |

**Table 38: Batteries and battery charger specifications**

| | |
|---|---|
| Batteries | |
| Two- and four-zone control panels | 2 x 7.2 Ah |
| Eight-zone control panel | 2 x 7.2 Ah or 2 x 12 Ah |
| Battery type | Sealed lead-acid |
| Battery charger voltage | 27.3 V at 20ºC −36mV/ºC |
| Battery charger current | |
| Two- and four-zone control panels | Max. 0.5 A |
| Eight-zone control panel | Max. 0.7 A |
| Out of service voltage level | < 22.75 V |
| No operation voltage level | < 21 V |
| Battery internal resistance (Ri max.) | |
| Two- and four-zone control panels | 1 Ω |
| Eight-zone control panel | 0.5 Ω |

**Table 39: Control panel current consumption specifications (EN 54-4) [1]**

| | |
|---|---|
| Min. current consumption (Imin) [2] | |
| Two-zone control panels | 0.042 A |
| Four-zone control panels | 0.051 A |
| Eight-zone control panels | 0.069 A |
| Max. current consumption in standby (Imax a) | |
| Two-zone control panels | 0.30 A |
| Four-zone control panels | 0.30 A |
| Eight-zone control panels | 0.39 A |
| Max. current consumption in alarm (Imax b) | |
| Two-zone control panels | 1.57 A |
| Four-zone control panels | 1.57 A |
| Eight-zone control panels | 2.78 A |

[1] With a single power source.
[2] No faults, no battery charging, with standard resistive EOL.

# Mechanical and environmental specifications

**Table 40: Mechanical specifications**

| | |
|---|---|
| Cabinet dimensions (no cover) | |
| Two- and four-zone control panels | 300 × 97 × 402 mm |
| Eight-zone control panel | 421 × 100 × 447 mm |
| Weight without batteries | |
| Two- and four-zone control panels | 2.8 kg |
| Eight-zone control panel | 3.9 kg |
| Number of cable knockouts | |
| Two- and four-zone control panels | 14 x Ø 20 mm at top of cabinet<br>2 x Ø 20 mm at bottom of cabinet<br>12 x Ø 20 mm at rear of cabinet |
| Eight-zone control panel | 20 x Ø 20 mm at top of cabinet<br>2 x Ø 20 mm at bottom of cabinet<br>26 x Ø 20 mm at rear of cabinet |
| IP rating | IP30 |

**Table 41: Environmental specifications**

| | |
|---|---|
| Operating temperature | −5 to +40ºC |
| Storage temperature | −20 to +70ºC |
| Relative humidity | 10 to 95% noncondensing |
| Type class conditions | 3K5 of IEC 60721-3-3 |

For detailed cabinet drawings and dimensions, see “Cabinet drawings and dimensions” on page 86.

# Fire network specifications

**Table 42: Fire network specifications**

| | |
|---|---|
| Maximum distance between control panels | 1.2 km |
| Maximum capacity | 32 nodes and 64 zones |
| Communication protocol | Proprietary peer-to-peer protocol based on RS-485 |

# Cabinet drawings and dimensions

**Figure 20: Two- and four-zone cabinet with cover**

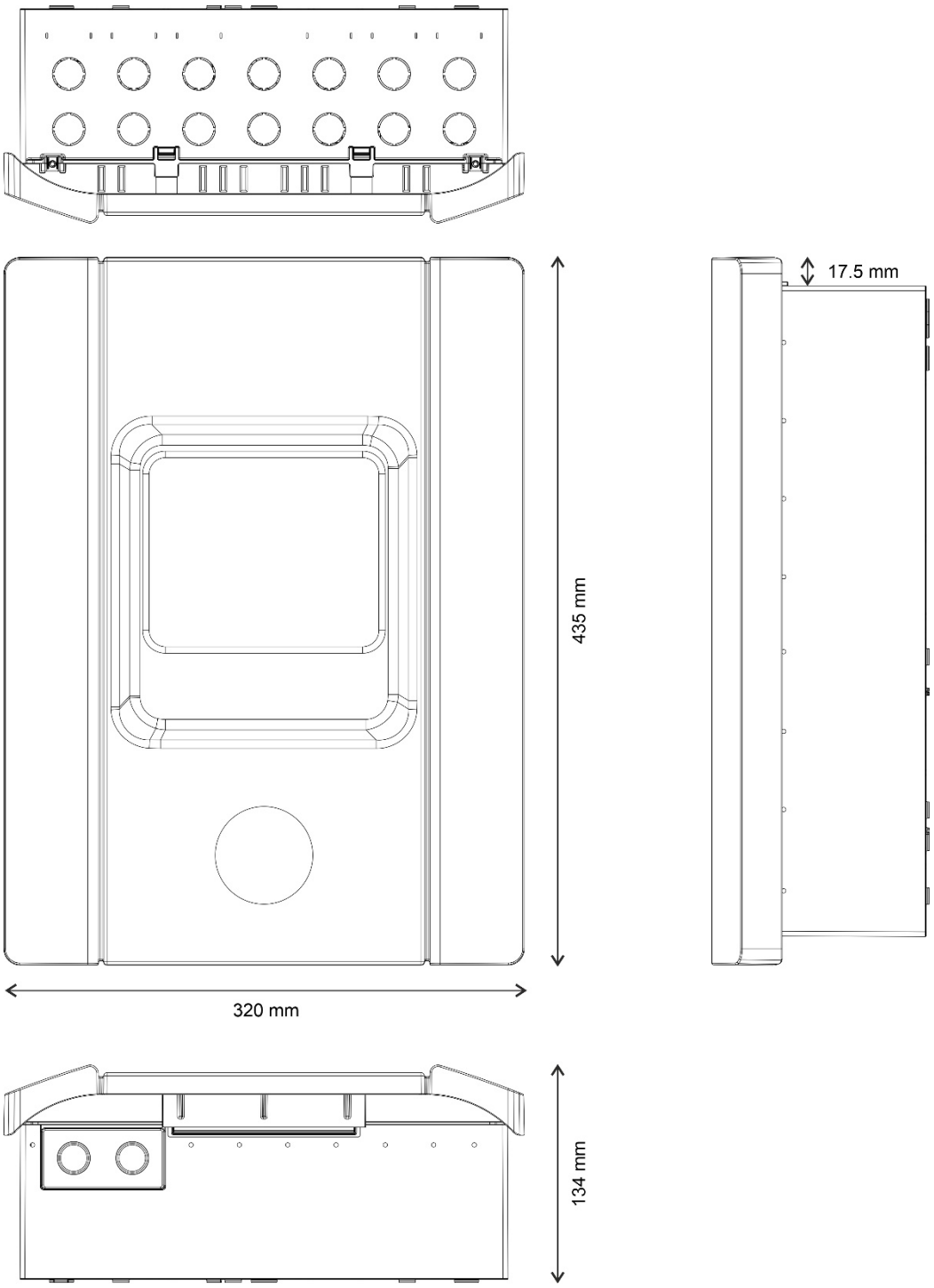

**Figure 21: Two- and four-zone cabinet without cover**

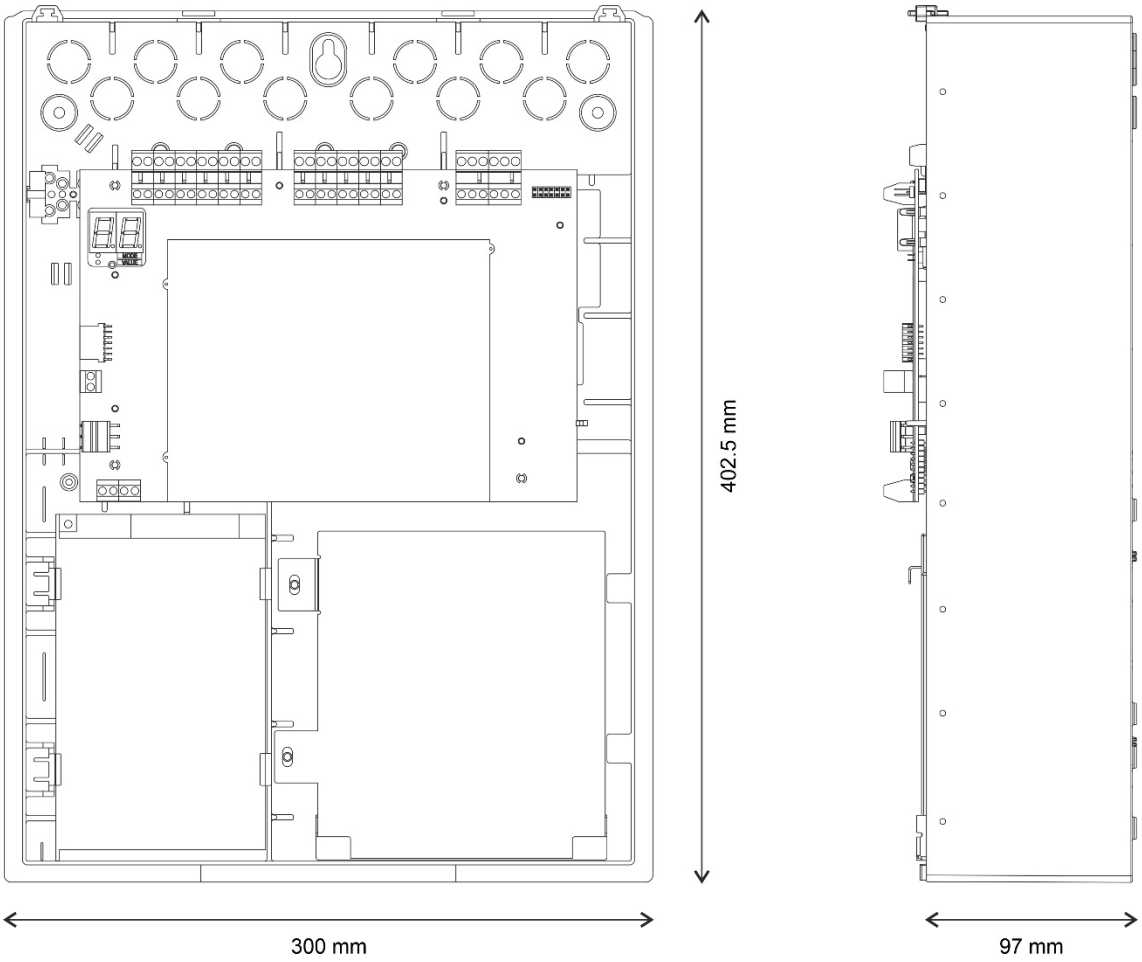

**Figure 22: Eight-zone cabinet with cover**

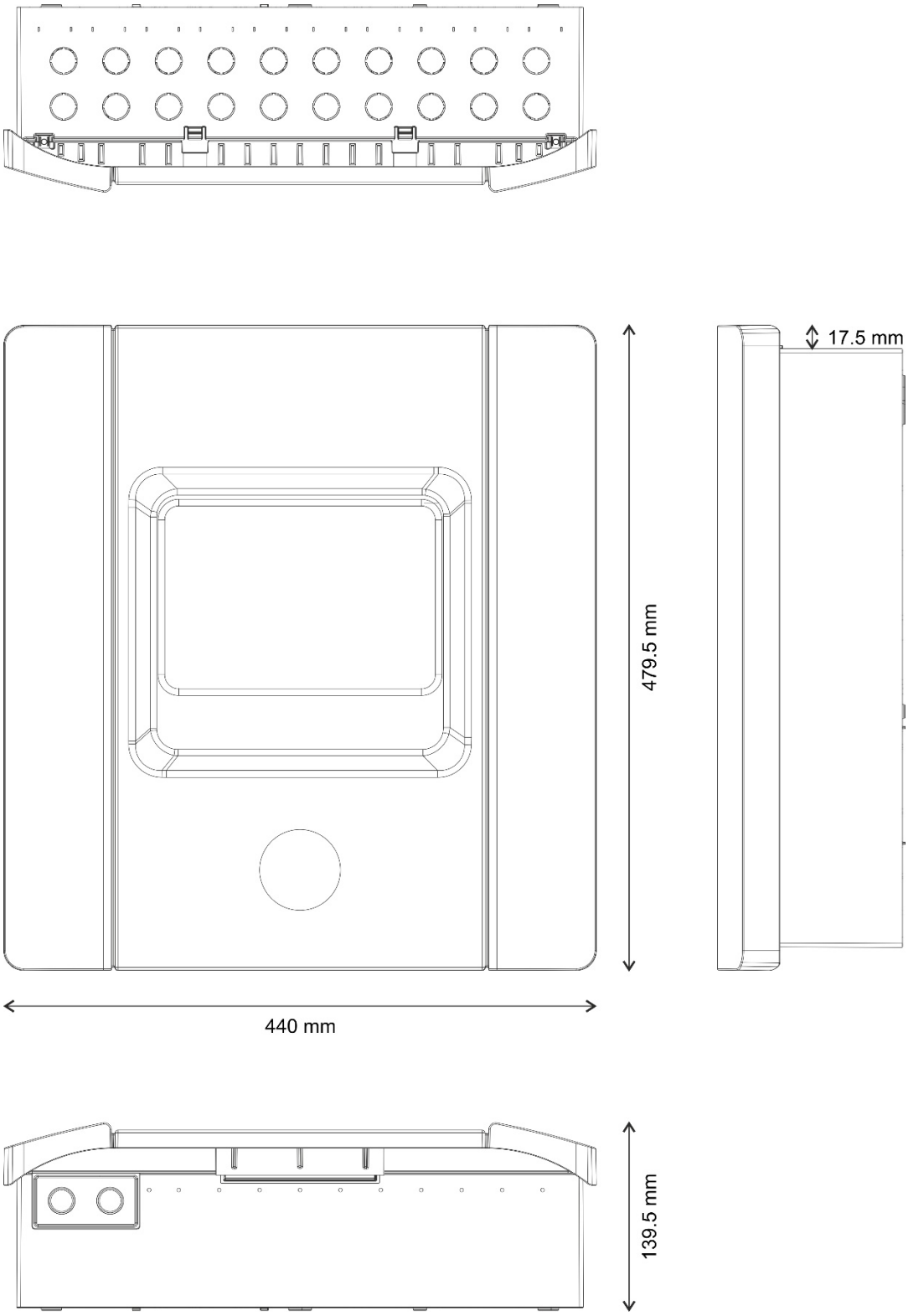

**Figure 23: Eight-zone cabinet without cover**

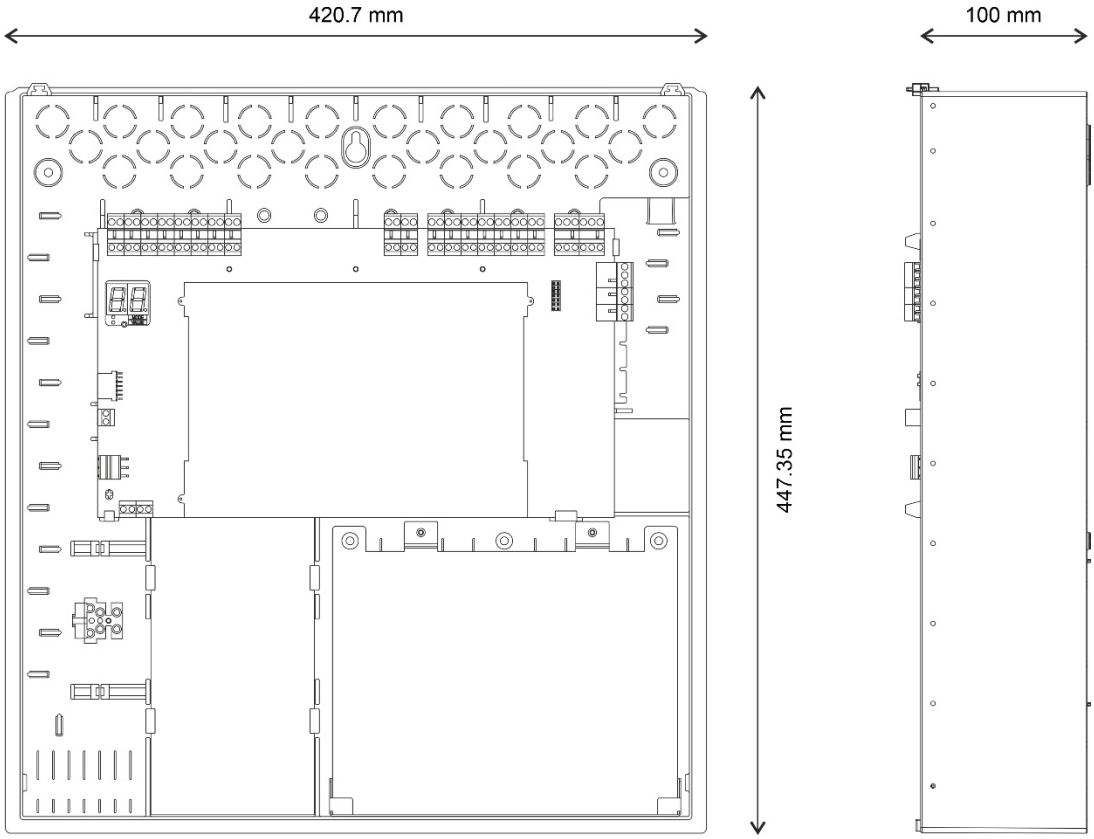

# Appendix A
# Configuration presets


**Summary**

This appendix includes detailed information on operating mode and expansion board configuration presets.


**Content**


Operating mode presets 92
- EN 54-2 presets 92
- EN 54-2 Evacuation 93
- EN 54-2 Scandinavia 94
- BS 5839-1 95
- NBN S 21-100 96
- NEN 2535 97

Expansion board presets 98

# Operating mode presets

## EN 54-2 presets

**Table 43: Configuration presets**

| Preset | Control panel | EOL type | Output type | Sounder outputs | Fire routing outputs | Zone type |
|---|---|---|---|---|---|---|
| 01 | Two-zone | Passive | Class B | 2 | 0 | Mixed |
| 01 | Four-zone, eight-zone | Passive | Class B | 3 | 1 | Mixed |
| 02 | Two-zone | Passive, CleanMe enabled | Class B | 2 | 0 | Mixed |
| 02 | Four-zone, eight-zone | Passive, CleanMe enabled | Class B | 3 | 1 | Mixed |
| 01 | Two-zone | EN 54-13 supervision | Class A | 1 | 0 | Odd: Automatic<br>Even: Manual |
| 01 | Four-zone, eight-zone | EN 54-13 supervision | Class A | 1 | 1 | Odd: Automatic<br>Even: Manual |

**Table 44: Additional configuration characteristics**

| | |
|---|---|
| Default sounder delay | 0 |
| Default fire routing delay | 0 |
| Default extended fire routing delay | 0 |
| Default zone delay | 0n |
| Start/Restart sounders | Start sounders only if there is a fire alarm |
| Sounders Silence Disabled Time | 1 minute |

**Table 45: Inputs and outputs**

| Input/Output | Standard | EN 54-13 |
|---|---|---|
| INPUT1 | Remote reset | Remote reset |
| INPUT2 | Delays off | Delays off |
| OUT1 | Sounder circuit | Sounder circuit |
| OUT2 | Sounder circuit | |
| OUT3 | Sounder circuit | Fire routing |
| OUT4 | Fire routing | |

Note: Two-zone control panels have only two outputs with EN 54-13 disabled (OUT1 and OUT2) or a single output with EN 54-13 enabled (OUT1/2).

# EN 54-2 Evacuation

**Table 46: Configuration presets**

| Preset | Control panel | EOL type | Output type | Sounder outputs | Zone type |
|---|---|---|---|---|---|
| 05 | Two-zone | Passive | Class B | 2 | Mixed |
| 05 | Four-zone, eight-zone | Passive | Class B | 4 | Mixed |
| 06 | Two-zone | Passive, CleanMe enabled | Class B | 2 | Mixed |
| 06 | Four-zone, eight-zone | Passive, CleanMe enabled | Class B | 4 | Mixed |
| 05 | Two-zone | EN 54-13 supervision | Class A | 1 | Odd: Automatic<br>Even: Manual |
| 05 | Four-zone, eight-zone | EN 54-13 supervision | Class A | 2 | Odd: Automatic<br>Even: Manual |

**Table 47: Additional configuration characteristics**

| | |
|---|---|
| Default sounder delay | 0 |
| Default zone delay | 0n |
| Start/Restart sounders | Start sounders or restart stopped sounders at user level 2 with fire alarm event |

**Table 48: Inputs and outputs**

| Input/Output | Standard | EN 54-13 |
|---|---|---|
| INPUT1 | Remote reset | Remote reset |
| INPUT2 | Delays off | Delays off |
| OUT1 | Sounder circuit | Sounder circuit |
| OUT2 | Sounder circuit | |
| OUT3 | Sounder circuit | Sounder circuit |
| OUT4 | Sounder circuit | |

Note: Two-zone control panels have only two outputs with EN 54-13 disabled (OUT1 and OUT2) or a single output with EN 54-13 enabled (OUT1/2).

# EN 54-2 Scandinavia

**Table 49: Configuration presets**

| Preset | Control panel | EOL type | Output type | Sounder outputs | Fire routing outputs | Zone type |
|---|---|---|---|---|---|---|
| 07 | Two-zone | Passive | Class B | 2 | 0 | Mixed |
| 07 | Four-zone, eight-zone | Passive | Class B | 3 | 1 | Mixed |
| 08 | Two-zone | Passive, CleanMe enabled | Class B | 2 | 0 | Mixed |
| 08 | Four-zone, eight-zone | Passive, CleanMe enabled | Class B | 3 | 1 | Mixed |
| 07 | Two-zone | EN 54-13 supervision | Class A | 1 | 0 | Odd: Automatic<br>Even: Manual |
| 07 | Four-zone, eight-zone | EN 54-13 supervision | Class A | 1 | 1 | Odd: Automatic<br>Even: Manual |

**Table 50: Additional configuration characteristics**

| | |
|---|---|
| Default sounder delay | 0 |
| Default fire routing delay | 1 |
| Default extended fire routing delay | 3 |
| Default zone delay | 0n |
| Start/Restart sounders | Start sounders or restart stopped sounders at Operator user level with or without a fire alarm event |

**Table 51: Inputs and outputs**

| Input/Output | Standard | EN 54-13 |
|---|---|---|
| INPUT1 (Two-zone control panel) | Remote reset | Remote reset |
| INPUT1 (Four- and eight-zone control panels) | Fire routing delay / extended fire routing delay | Fire routing delay / extended fire routing delay |
| INPUT2 | Delays off | Delays off |
| OUT1 | Sounder circuit | Sounder circuit |
| OUT2 | Sounder circuit | |
| OUT3 | Sounder circuit | Fire routing |
| OUT4 | Fire routing | |

Note: Two-zone control panels have only two outputs with EN 54-13 disabled (OUT1 and OUT2) or a single output with EN 54-13 enabled (OUT1/2).

# BS 5839-1

**Table 52: Configuration presets**

| Preset | Control panel | EOL type | Output type | Sounder outputs [1] | Zone type |
|---|---|---|---|---|---|
| 11 | Two-zone | Active | Class B | 2 (stage 1 “Alert”) | Mixed |
| 11 | Four-zone, eight-zone | Active | Class B | 4 (stage 1 “Alert”) | Mixed |
| 12 | Two-zone | Active, CleanMe enabled | Class B | 2 (stage 1 “Alert”) | Mixed |
| 12 | Four-zone, eight-zone | Active, CleanMe enabled | Class B | 4 (stage 1 “Alert”) | Mixed |
| 13 | Two-zone | Active | Class B | 2 (stage 2 “Evacuation”) | Mixed |
| 13 | Four-zone, eight-zone | Active | Class B | 4 (stage 2 “Evacuation”) | Mixed |
| 14 | Two-zone | Active, CleanMe enabled | Class B | 2 (stage 2 “Evacuation”) | Mixed |
| 14 | Four-zone, eight-zone | Active, CleanMe enabled | Class B | 4 (stage 2 “Evacuation”) | Mixed |

[1] Stage 1 “Alert”: sounders off during any configured sounder delay.
Stage 2 “Evacuation”: sounders intermittent during any configured sounder delay.

**Table 53: Additional configuration characteristics**

| | |
|---|---|
| Default sounder delay | 0 |
| Default zone delay | 0n |
| Start/Restart sounders | Start sounders or restart stopped sounders at Operator user level with or without a fire alarm event |

**Table 54: Inputs and outputs**

| | |
|---|---|
| INPUT1 | Class change |
| INPUT2 | Delays off |
| OUT1 | Sounder circuit |
| OUT2 | Sounder circuit |
| OUT3 | Sounder circuit |
| OUT4 | Sounder circuit |

Note: Two-zone control panels have only two outputs with EN 54-13 disabled (OUT1 and OUT2) or a single output with EN 54-13 enabled (OUT1/2).

# NBN S 21-100

**Table 55: Configuration presets**

| Preset | Control panel | EOL type | Output type | Warning sounder outputs | Evacuation sounder outputs | Zone type |
|---|---|---|---|---|---|---|
| 21 | Four-zone, eight-zone | Passive | Class B | 2 | 2 | Odd: Automatic<br>Even: Manual |
| 22 | Four-zone, eight-zone | Passive, CleanMe enabled | Class B | 2 | 2 | Odd: Automatic<br>Even: Manual |
| 21 | Four-zone, eight-zone | EN 54-13 supervision | Class A | 1 | 1 | Odd: Automatic<br>Even: Manual |

**Table 56: Additional configuration characteristics**

| | |
|---|---|
| Default sounder delay | 0 minutes |
| Default zone delay | ON |
| Start/Restart sounders | Start sounders or restart stopped sounders at user level 2 with or without a fire alarm event |

**Table 57: Inputs and outputs**

| Input/Output | Standard | EN 54-13 |
|---|---|---|
| INPUT1 | Remote reset | Remote reset |
| INPUT2 | Delays off | Delays off |
| OUT1 | Evacuation sounders | Evacuation sounders |
| OUT2 | Evacuation sounders | |
| OUT3 | Warning sounders | Warning sounders |
| OUT4 | Warning sounders | |

Note: Two-zone control panels have only two outputs with EN 54-13 disabled (OUT1 and OUT2) or a single output with EN 54-13 enabled (OUT1/2).

# NEN 2535

**Table 58: Configuration presets**

| Preset | Control panel | EOL type | Output type | Sounder outputs | Fire routing outputs | Zone type |
|---|---|---|---|---|---|---|
| 31 | Four-zone, eight-zone | Passive | Class B | 2 | 2 | Odd: Automatic<br>Even: Manual |
| 31 | Four-zone, eight-zone | EN 54-13 supervision | Class A | 1 | 1 | Odd: Automatic<br>Even: Manual |

**Table 59: Additional configuration characteristics**

| | |
|---|---|
| Default fire routing delay | 1 minute |
| Default extended fire routing delay | 3 minutes |
| Default zone delay | ON |
| Start/Restart sounders | Start sounders only if there is a fire alarm |

**Table 60: Inputs and outputs**

| Input/Output | Standard | EN 54-13 |
|---|---|---|
| INPUT1 | Fire routing inhibit delay | Fire routing acknowledgement (type 1, 100 seconds) |
| INPUT2 | Delays off | Fault warning output open supervision |
| OUT1 | Sounder circuit | Sounder circuit |
| OUT2 | Sounder circuit | |
| OUT3 | Fire routing (automatic) | Fire routing |
| OUT4 | Fire routing (manual) | |

**Note:** A supervised expansion board is required for fire protection and fault warning outputs. An additional (optional) supervised expansion board may be installed for individual automatic and manual fire routing outputs.

# Expansion board presets

The following tables include the display settings for relay and supervised output expansion board configuration presets.

**Table 61: Expansion board zone configuration with EN 54-13 supervision disabled**

| Display | Zone | Output | Delay |
|---|---|---|---|
| 01 | 1 | 1 | Yes |
| | 2 | 2 | Yes |
| | 3 | 3 | Yes |
| | 4 | 4 | Yes |
| 02 | 5 | 1 | Yes |
| | 6 | 2 | Yes |
| | 7 | 3 | Yes |
| | 8 | 4 | Yes |
| 05 | 1 | 1 | Yes |
| | | 2 | Yes |
| | 2 | 3 | Yes |
| | | 4 | Yes |
| 06 | 3 | 1 | Yes |
| | | 2 | Yes |
| | 4 | 3 | Yes |
| | | 4 | Yes |
| 07 | 5 | 1 | Yes |
| | | 2 | Yes |
| | 6 | 3 | Yes |
| | | 4 | Yes |
| 08 | 7 | 1 | Yes |
| | | 2 | Yes |
| | 8 | 3 | Yes |
| | | 4 | Yes |
| 13 | 1 or 2 | 1 | Yes |
| | 3 or 4 | 2 | Yes |
| | 5 or 6 | 3 | Yes |
| | 7 or 8 | 4 | Yes |

| Display | Zone | Output | Delay |
|---|---|---|---|
| 15 | 1 and 2 | 1 | Yes |
| | 3 and 4 | 2 | Yes |
| | 5 and 6 | 3 | Yes |
| | 7 and 8 | 4 | Yes |
| 17 | 1, 2, 3, or 4 | 1 | Yes |
| | | 2 | Yes |
| | 5, 6, 7, or 8 | 3 | Yes |
| | | 4 | Yes |
| 18 | 1 and 2 | 1 | Yes |
| | | 2 | Yes |
| | 3 and 4 | 3 | Yes |
| | | 4 | Yes |
| 19 | 5 and 6 | 1 | Yes |
| | | 2 | Yes |
| | 7 and 8 | 3 | Yes |
| | | 4 | Yes |
| 20 | 1 or 2 | 1 | Yes |
| | | 2 | Yes |
| | 3 or 4 | 3 | Yes |
| | | 4 | Yes |
| 21 | 5 or 6 | 1 | Yes |
| | | 2 | Yes |
| | 7 or 8 | 3 | Yes |
| | | 4 | Yes |

**Table 62: Expansion board event configuration with EN 54-13 supervision disabled**

| Display | Event | Output | Delay |
|---|---|---|---|
| 24 | Alarm | 1-4 | No |

| Display | Event | Output | Delay |
|---|---|---|---|
| 33 | Buzzer on | 1 | No |

| Display | Event | Output | Delay |
|---|---|---|---|
| 25 | Fault | 1-4 | No |
| 26 | Alarm | 1-2 | No |
| | Fault | 3-4 | No |
| 27 | Alarm | 1 | No |
| | Fault | 2 | No |
| | Buzzer on | 3 | No |
| | Reset | 4 | No |
| 29 | Fault [1] | 1-4 | No |
| 30 | Alarm | 1-2 | No |
| | Fault [1] | 3-4 | No |
| 31 | Alarm | 1 | No |
| | Fault [1] | 2 | No |
| | Buzzer on | 3 | No |
| | Reset on | 4 | No |
| 32 [2] | Fire protection | 1 | No |
| | | 2 | No |
| | Fault warning output [3] | 3 | No |
| | Fault [1] | 4 | No |

| Display | Event | Output | Delay |
|---|---|---|---|
| | | 2 | No |
| | Reset on | 3 | No |
| | | 4 | No |
| 34 [2] | Fire Routing (Auto) | 1 | No |
| | | 2 | No |
| | Fire routing (Manual) | 3 | No |
| | | 4 | No |
| 35 [2] | Fire routing | 1 | No |
| | | 2 | No |
| | Fault warning output [3] | 3 | No |
| | Fault [1] | 4 | No |
| 36 [4] | Remote RB/SBx.01 output activation [4] | 1 | No |
| | Remote RB/SBx.02 output activation [4] | 2 | No |
| | Remote RB/SBx.02 output activation [4] | 2 | No |
| | Remote RB/SBx.04 output activation [4] | 4 | No |

[1] Fail-safe mode: output is active when there is no fault.
[2] These presets are only available for 2010-1-SB supervised expansion boards.
[3] NEN 2535 only. Fault warning output open supervision (subject to input configuration).
[4] RB/SBx is the expansion board x. For two-zone and four-zone panels, x can be 1 or 2. For eight-zone and evacuation panels, x can be 1, 2, 3 or 4.

Configuration 36 is only possible when the Network Remote Output Control option (nO) is set and it is then configured by default.

**Table 63: Expansion board sounder circuit configuration with EN 54-13 supervision disabled** [1]

| Display | Events | Output | Delay |
|---|---|---|---|
| 90 [2] | Evacuation sounders | 1 | No |
| | | 2 | No |
| | Warning sounders | 3 | No |
| | | 4 | No |
| 91 | Sounders<br>(Evacuation sounders for NBN S 21-100) | 1 | No |
| | | 2 | No |
| | | 3 | No |
| | | 4 | No |
| 92 [2] | Warning sounders | 1 | No |
| | | 2 | No |
| | | 3 | No |
| | | 4 | No |

[1] These presets are only available for supervised expansion boards.
[2] NBN S 21-100 only

**Table 64: Expansion board zone configuration with EN 54-13 supervision enabled**

| Display | Zone | Outputs | Delay |
|---|---|---|---|
| 05 | 1 | 1 and 2 | Yes |
| | 2 | 3 and 4 | Yes |
| 06 | 3 | 1 and 2 | Yes |
| | 4 | 3 and 4 | Yes |
| 07 | 5 | 1 and 2 | Yes |
| | 6 | 3 and 4 | Yes |
| 08 | 7 | 1 and 2 | Yes |
| | 8 | 3 and 4 | Yes |
| 17 | 1, 2, 3 or 4 | 1 and 2 | Yes |
| | 5, 6, 7, or 8 | 3 and 4 | Yes |

| Display | Zone | Outputs | Delay |
|---|---|---|---|
| 18 | 1 and 2 | 1 and 2 | Yes |
| | 3 and 4 | 3 and 4 | Yes |
| 19 | 5 and 6 | 1 and 2 | Yes |
| | 7 and 8 | 3 and 4 | Yes |
| 20 | 1 or 2 | 1 and 2 | Yes |
| | 3 or 4 | 3 and 4 | Yes |
| 21 | 5 or 6 | 1 and 2 | Yes |
| | 7 or 8 | 3 and 4 | Yes |

**Table 65: Expansion board event configuration with EN 54-13 supervision enabled**

| Display | Event | Outputs | Delay | Display | Event | Outputs | Delay |
|---|---|---|---|---|---|---|---|
| 24 | Alarm | 1 and 2, 3 and 4 | No | 32 [2] | Fire protection | 1 and 2 | No |
| | | | | | Fault warning output [3] | 3 | |
| | | | | | Fault [1], [5] | 4 | |
| 25 | Fault | 1 and 2 3 and 4 | No | 33 | Buzzer on | 1 and 2 | No |
| | | | | | Reset on | 3 and 4 | |
| 26 | Alarm | 1 and 2 | No | 34 [2] | Fire routing (auto) | 1 and 2 | No |
| | Fault | 3 and 4 | | | Fire routing (manual) | 3 and 4 | |
| 29 | Fault [1] | 1 and 2 3 and 4 | No | 35 [2] | Fire routing | 1 and 2 | No |
| | | | | | Fault warning output [3] | 3 | |
| | | | | | Fault [5] | 4 | |
| 30 | Alarm | 1 and 2 | No | 36 [4] | Remote RB/SBx.01-02 output activation | 1 and 2 | No |
| | Fault [1] | 3 and 4 | | | Remote RB/SBx.03-04 output activation | 3 and 4 | No |

[1] Fail-safe mode: output is active when there is no fault.
[2] These presets are only available for 2010-1-SB supervised expansion boards.
[3] NEN 2535 only. Fault warning output open supervision (subject to input configuration).
[4] RB/SBx is the expansion board x. For two-zone and four-zone panels, x can be 1 or 2. For 8 zone and evacuation panels, x can be 1, 2, 3 or 4.

Configuration 36 is only possible when the Network Remote Output Control option (nO) is set and it is then configured by default

[5] Not compliant to EN 54-13.

**Table 66: Expansion board sounder circuit configuration with EN 54-13 supervision enabled** [1]

| Display | Events | Output | Delay |
|---|---|---|---|
| 90 [2] | Evacuation sounders | 1 and 2 | No |
| | Warning sounders | 3 and 4 | No |
| 91 | Sounders (or Evacuation sounders for NBN S 21-100) | 1 and 2 or 3 and 4 | No |
| 92 [2] | Warning sounders | 1 and 2 or 3 and 4 | No |

[1] These presets are only available for supervised expansion boards.
[2] NBN S 21-100 only

# Appendix B
# Regulatory information

**Summary**

This appendix contains regulatory information that applies to your control panel.

**Content**

European standards 104
European regulations for construction products 105

# European standards

## European standards for fire control and indicating equipment

These control panels have been designed in accordance with European EN 54-2, EN 54-4, BS 5839-1, NBN S 21-100, and NEN 2535 standards.

In addition, all models comply with the following EN 54-2 optional requirements.

**Table 67: European standards**

| Option | Description |
|---|---|
| 7.8 | Output to fire alarm devices<br>Note: inputs and outputs on the optional 2010-1-SB expansion board do not support the optional requirement of EN 54-2 clause 7.8 and should not to be used for fire alarm devices. |
| 7.9.1 | Output to fire alarm routing equipment [1] |
| 7.9.2 | Alarm confirmation input from fire alarm routing equipment [1] |
| 7.10 | Output to fire protection equipment (type A) [2] |
| 7.11 | Delays to outputs |
| 7.13 | Alarm counter [3] |
| 8.4 | Total loss of the power supply |
| 8.9 | Output to fault warning routing equipment [2] |
| 10 | Test condition |

[1] Excluding two-zone models.
[2] NEN 2535 operating mode only.
[3] Dutch models only.

## European standards for electrical safety and electromagnetic compatibility

These control panels have been designed in accordance with the following European standards for electrical safety and electromagnetic compatibility:

- EN 62368-1
- EN 50130-4
- EN 61000-6-3
- EN 61000-3-2
- EN 61000-3-3

## EN 54-13 European compatibility assessment of system components

These control panels form part of a certified system as described by the EN 54-13 Standard when installed and configured for EN 54-13 operation as described by the manufacturer in the corresponding installation documentation.

Contact your installation or maintenance contractor to determine if your fire system is compliant with this standard.

# European regulations for construction products

This section provides a summary on the declared performance according to the Construction Products Regulation (EU) 305/2011 and Delegated Regulations (EU) 157/2014 and (EU) 574/2014.

For detailed information, see the product Declaration of Performance (available at firesecurityproducts.com).

| | |
|---|---|
| Conformity | CE |
| Notified/Approved body | 0370 |
| Manufacturer | Carrier Manufacturing Poland Spółka Z o.o.<br>Ul. Kolejowa 24, 39-100 Ropczyce, Poland.<br><br>Authorized EU manufacturing representative:<br>Carrier Fire & Security B.V., Kelvinstraat 7, 6003 DH Weert, Netherlands. |
| Year of first CE marking | 24 |
| Declaration of Performance number<br>NC-PF2, NC-PF2-SC<br>NC-PF4, NC-PF4-SC<br>NC-PF8, NC-PF8-SC | <br><br>BCN-3100001<br>BCN-3100002<br>BCN-3100003 |
| Standards | EN 54-2:1997 + AC:1999 + A1:2006<br>EN 54-4:1997 + AC:1999 + A1:2002 + A2:2006 |
| Product identification | See model number on product identification label |
| Intended use | See the product Declaration of Performance |
| Declared performance | See the product Declaration of Performance |

# Index


## A

auxiliary 24 V reset, 58

## B

battery
- compatible batteries, 77
- connections, 22
- maintenance, 77
- replacement, 77
- troubleshooting, 77

## C

cabinet
- layout, 7
- wall mounting, 10

cables, recommended, 11
commissioning
- battery startup, 73
- fault startup, 72
- normal startup, 72

configuration
- advanced, 46
- basic, 36
- common tasks, 34
- expansion board, 61
- fire network and repeaters, 64
- Firenet and Firenet repeater maps, 68
- input, 55
- zone, 52

connections, 11
- alarm and fault relays, 23
- auxiliary equipment, 22
- battery, 22
- detectors, 15
- expansion boards, 23
- fire network, 23
- inputs, 16
- mains power supply, 21
- MCP, 15
- outputs, 18
- system, overview, 12
- zone, 14

## D

delays
- fire routing, 42
- fire routing, extended, 44
- sounders, 41
- zone, 53

## F

fire network connections, 23
firmware, configuration, and serial number information, 59
functional tests, 74

## I

input
- configuration, 55
- connections, 16
- functionality, 16

interface controls, 32

## M

mains power supply, 21
maintenance
- battery, 77

menu
- advanced configuration, 46
- basic configuration, 36

## O

output
- class, 18
- connections, 18
- functionality, 18
- polarity, 19
- termination, 19

## P


password change, 57
presets
    BS 5839-1, 95
    EN 54-2, 92
    EN 54-2 Evacuation, 93
    EN 54-2 Scandinavia, 94
    expansion board, 98
    NBN S 21-100, 96
    NEN 2535, 97


## R


response times, 74


## S


seven-segment display, 33
sounder
    operation during a zone test, 49
    re-sound, 50
    silence disabled time, 51


## U


user interface
    2Z/4Z, 27
    8Z, 28
user levels, 30
    passwords and indications, 31


## Z


zone
    configuration, 14, 52
    connections, 14
    line resistance, 14
    termination, 14
    type, 54