Radar Installation and Configuration

Product Line: Accessory

Contents

- Installation
- Configuration
- Q&A

Installation

Process

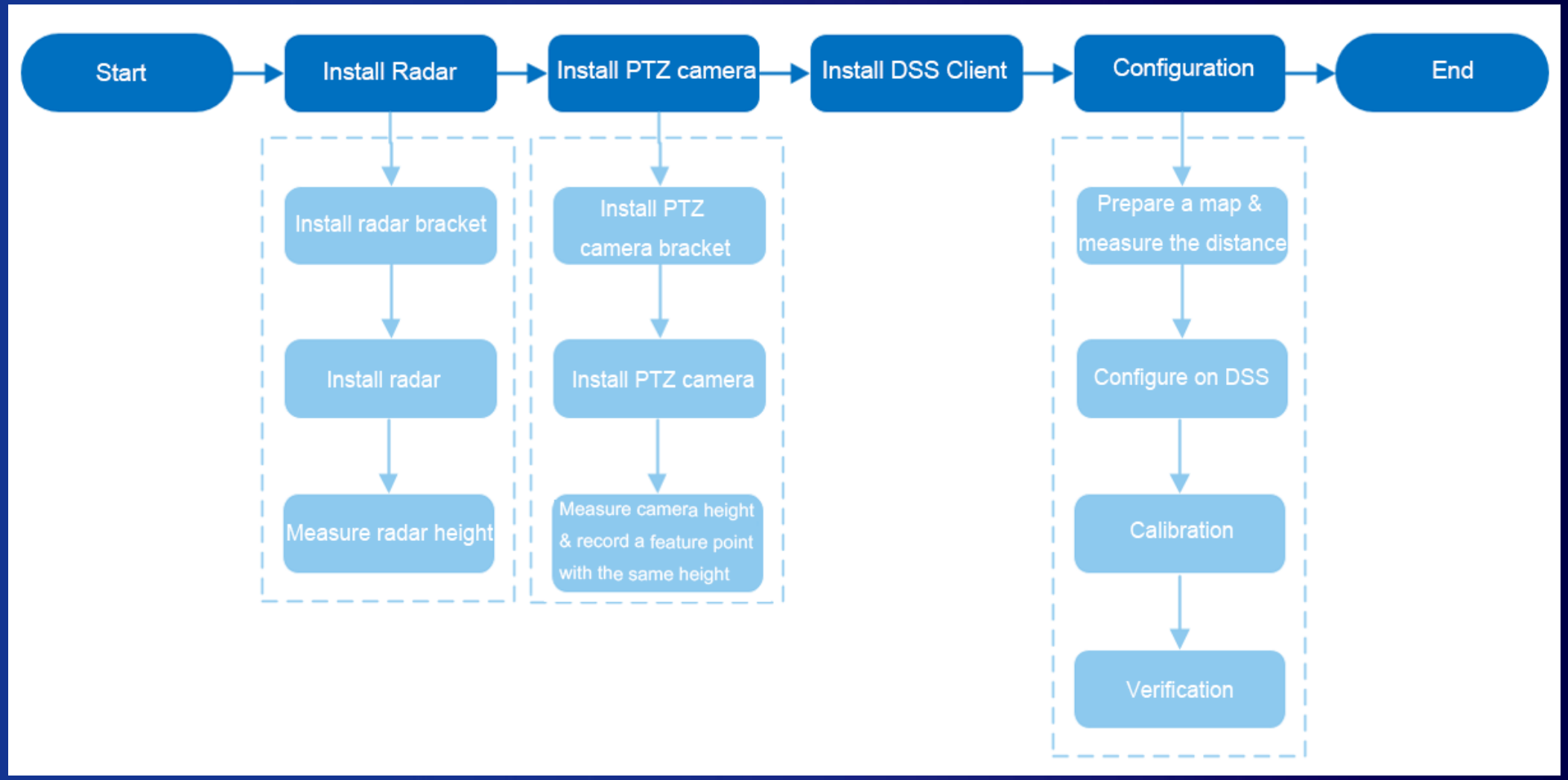

Installation

Site Selection

- Outdoor areas excluding crowded sites.
- Make sure that there is no large area of metal or building near or directly in front of the radar.
- Avoid bumpy detection range; otherwise, the tracking effect will be affected.
- Not applicable for target detection in the woods.

Narrow street

Bumpy road

Thicket and woods

Installation

Detection Range Requirements

- Apply end-to-end layout and avoid face-to-face detection ranges.
- Avoid traversing of the target in the detection range (applicable to 50/120/300/450 m radar).

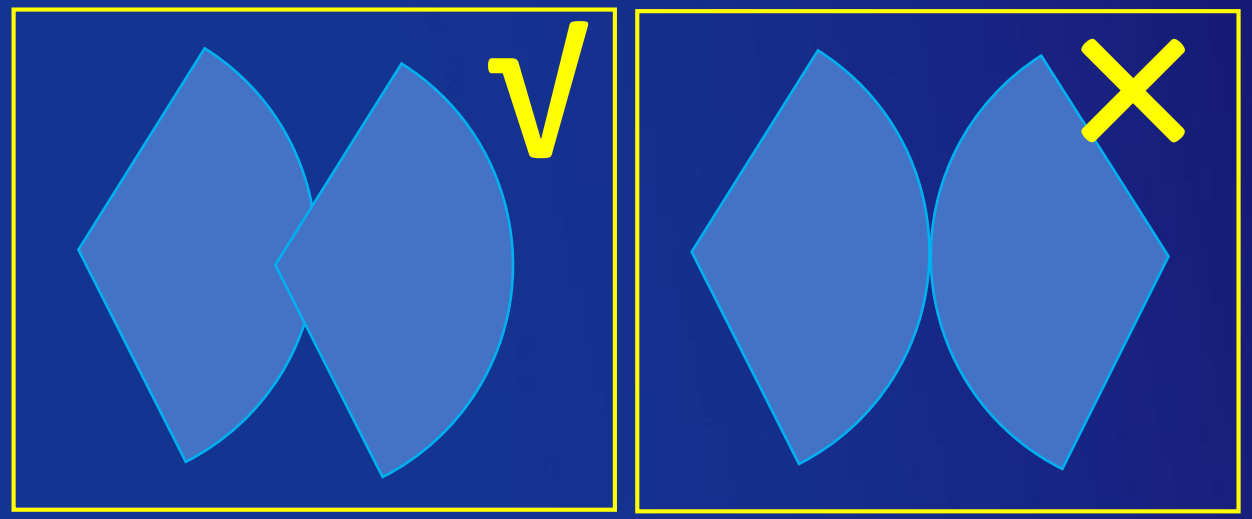

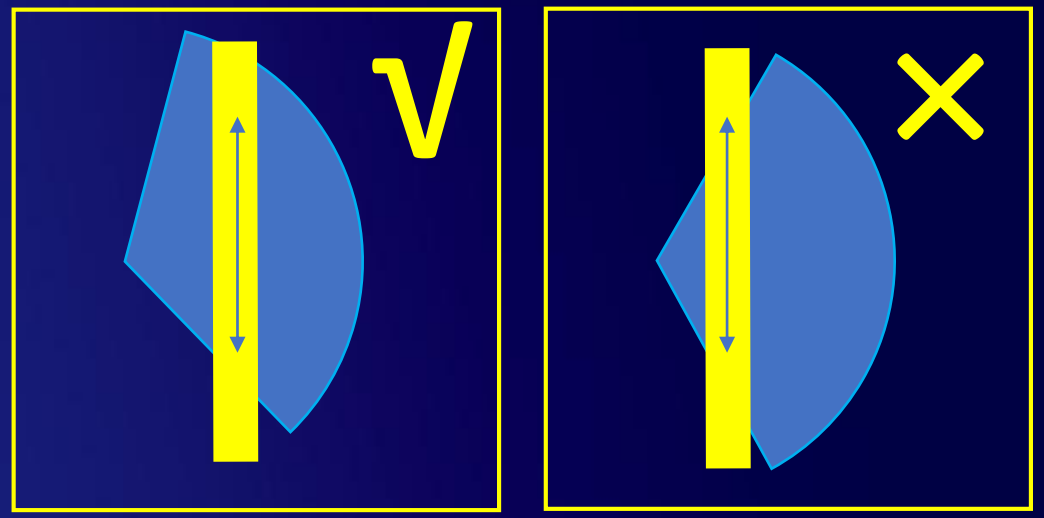

Installation

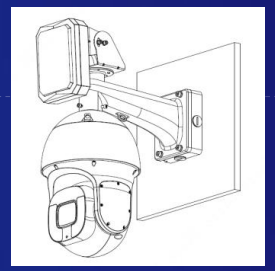

Integrated installation
PFB414W

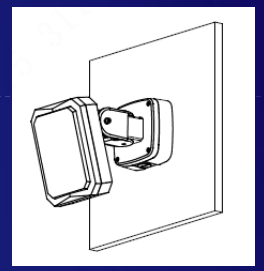

Separate installation
PFB510W

Installation Requirements

- Installation height: 2–6 m
- Pitch angle: 2°–5°
- Installation height and pitch angle will affect the blind zone.
- **The pitch angle cannot exceed 8°; otherwise, the ground reflection will be strengthened, affecting the detection and narrowing the max. detection range.**
- **Avoid tilting the PTZ camera while installing.**
- Radar and PTZ camera can be installed together or separately.
- **Please record the installation data for configuring Radar-PTZ camera smart tracking; otherwise, the tracking accuracy will be affected.**

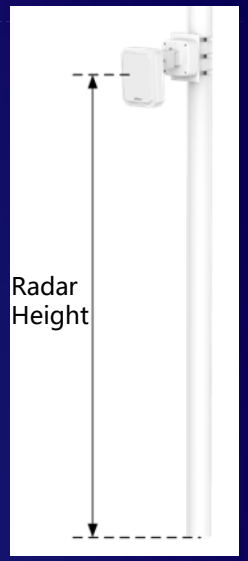

Installation height
(Center to ground)

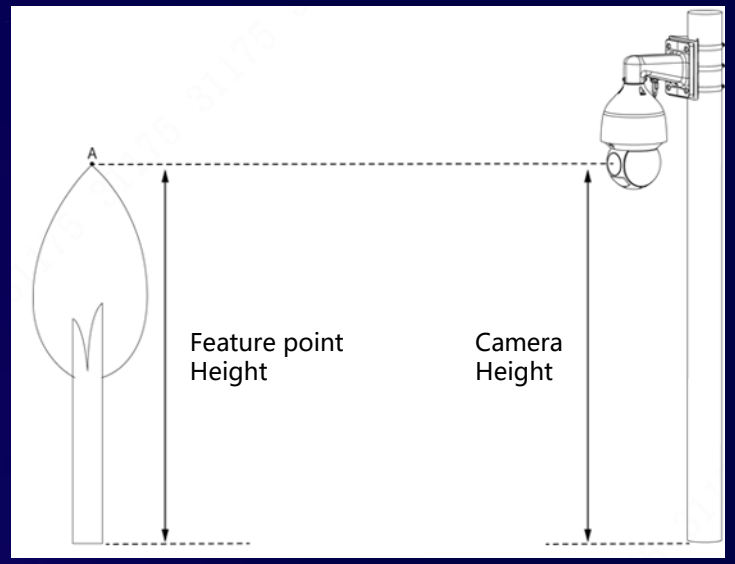

Same height of the
PTZ camera lens

Installation height
(Lens to ground)

Installation Height (h)	Pitch Angle (α)	Blind Zone (L') (50 m/120 m radar)	Blind Zone (L') (300 m/450 m radar)
2 m	2°–5°	0 m–5 m	0 m–7 m
3 m	3°–6°	0 m–8 m	0 m–12 m
4 m	4°–6°	0 m–11 m	0 m–18 m
5 m	4°–6°	0 m–14 m	0 m–23 m
6 m	6°–7°	0 m–16 m	0 m–24 m

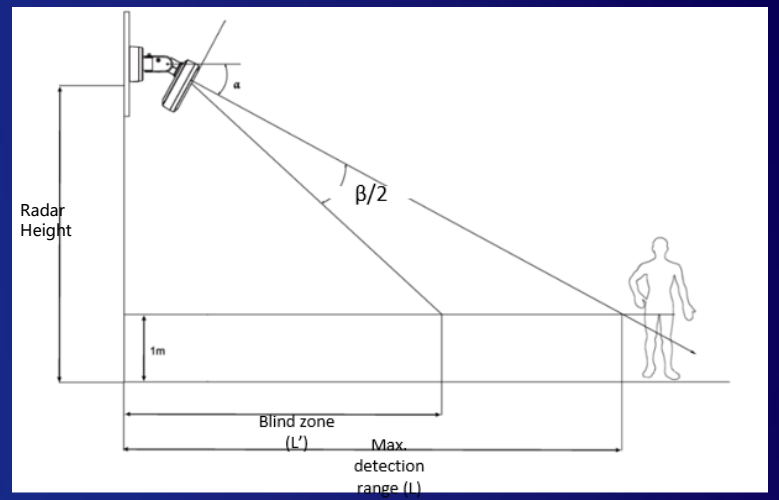

Blind zone:

$$L' = \frac{h-1}{\tan\left(\alpha + \frac{\beta}{2}\right)}$$

Max. detection range (α > β/2):

$$L = \frac{h-1}{\tan(\alpha - \frac{\beta}{2})}$$

Configuration

Preparing Maps

Optimal: Photo by drone

Select a segment on the map and measure the actual distance on the spot.

Alternative: Real-scene map (Google Maps)

Select a segment on the map and measure the actual distance by measuring tools.

- **Record the position and orientation of the radar on the map.**
- **The map affects the final detection effect of the radar. An accurate map helps with the drawing of detection range!**

Steps

Open DSS client →Configure map→Radar positioning→Bind PTZ camera

Calibrate radar→Manage area

Open radar web→Import map→Radar positioning

Configuration

Step 1: Configuring map (DSS client)

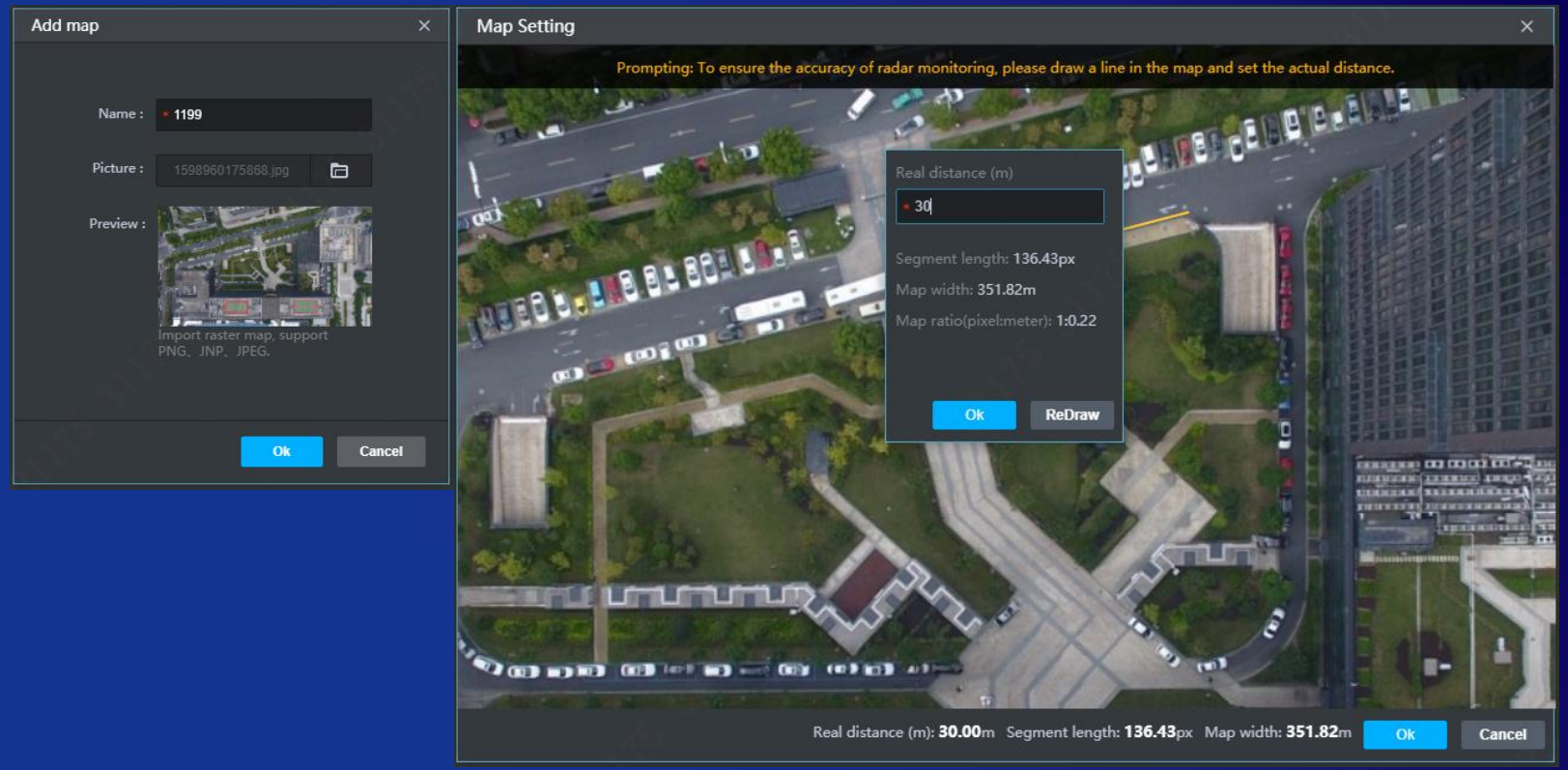

1. Select and import the map.
2. Draw a line on the map and enter the actual distance to calculate the map area.

Configuration

Step 2: Radar positioning (DSS client)

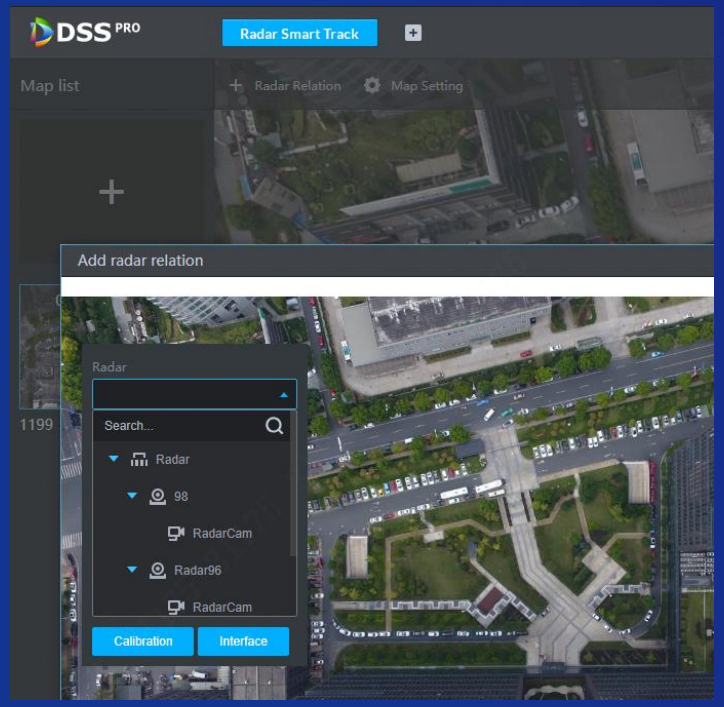

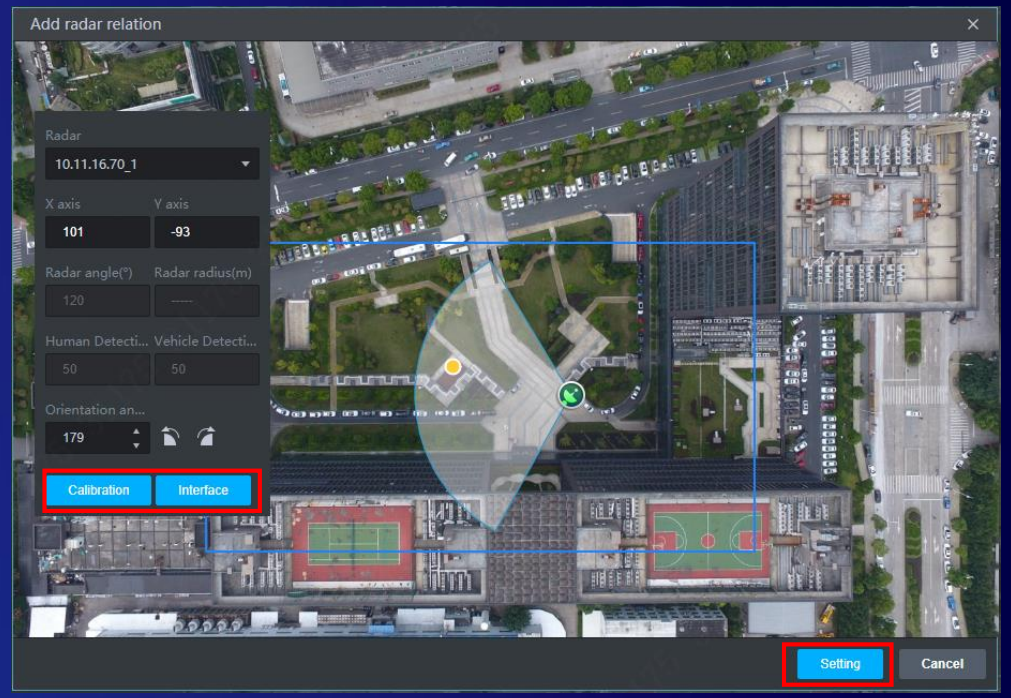

1. Add radar-PTZ camera smart tracking.
2. Move the radar to the actual position.
3. Adjust the orientation of the radar by dragging the sector or changing the value.
4. Click Configure.

Note:

1. You can judge the radar positioning by clicking Calibration and Interface (bind the PTZ camera before viewing the live view).

2. When you click Setting and nothing happens, try several times, restart the PC or change to another one. This issue is related to PC performance and will be fixed.

Configuration

Step 3: Binding the PTZ camera

DSS client

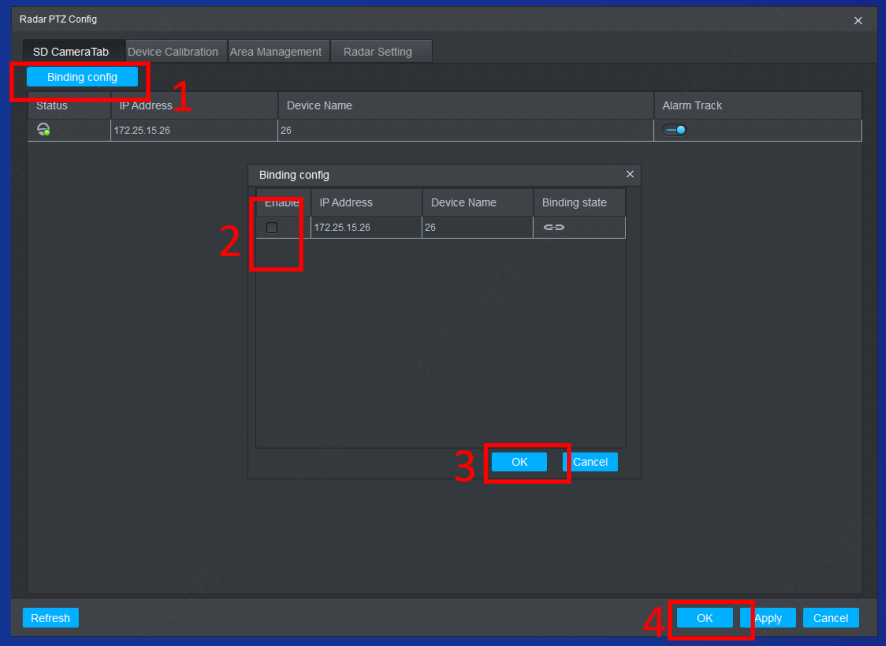

Radar web

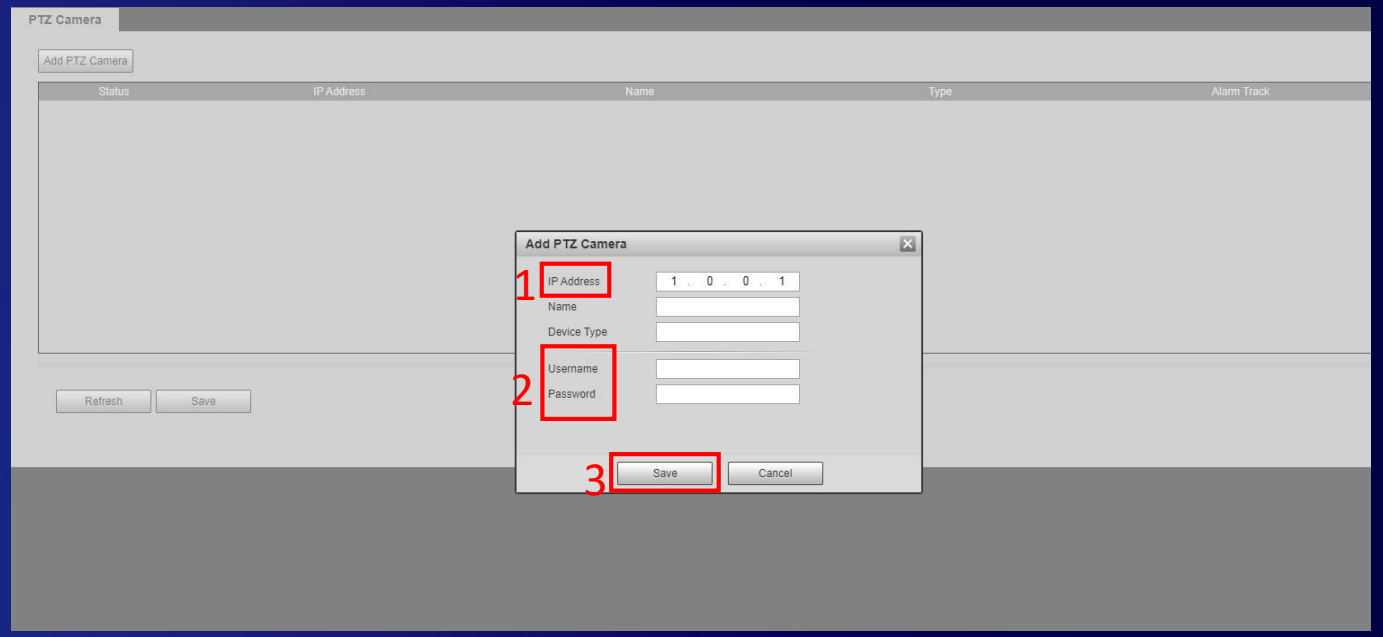

Binding config: Check the IP of the corresponding PTZ camera, and click **OK**, and then **OK.**

Note:

No need to configure in other tabs (Device Calibration, Area Management, Radar Settings).

Configuring other functions on the radar web is more convenient.

If DSS platform is not supported, bind the PTZ camera on the radar web.

Radar Settings → PTZ camera→Add PTZ camera→Enter IP, username and password→Click **Save**

- **If you have multiple radars, add them all before configuring.**
- **Only limited number of radars can be added to a single map. You can add a map or contact us to customize for you.**
- **The default port is 80. When using port mapping for networking, enter the port number according to the actual situation.**

Configuration

Step 4: Importing the map (Skip this step if you use DSS)

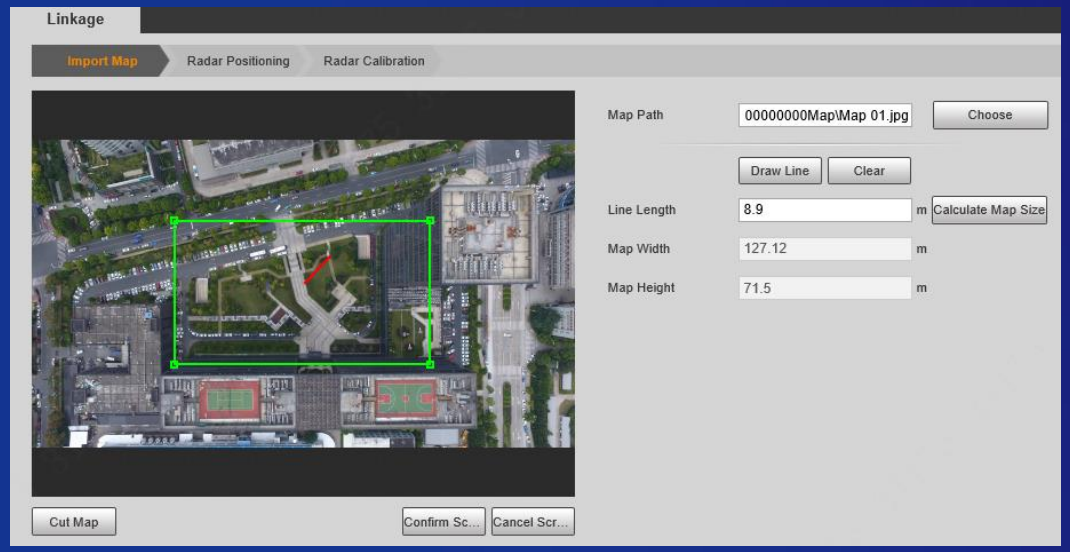

1. Select and import the map.
2. Select an area according to the actual position.
3. Draw a line on the map and enter the actual distance to calculate the map area.

If the map has been configured on the platform, skip this step and click Next.

Step 5: Radar positioning (Skip this step if you use DSS)

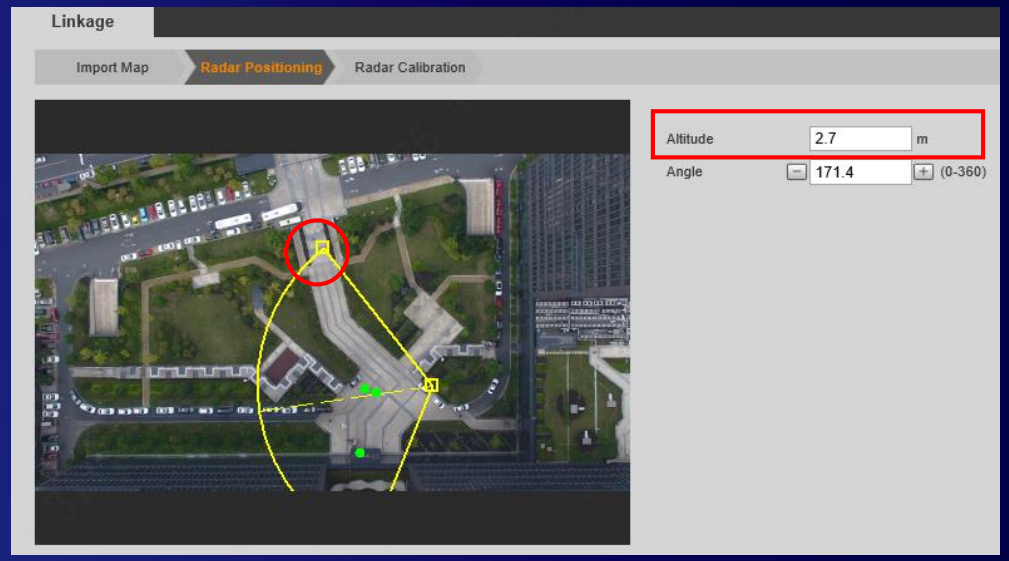

1. Move the radar to the actual position.
2. Adjust the orientation of the radar by dragging the sector or changing the value (red box).

Note: Judge the position according to the movement of tracking point .

3. Enter the installation height of the radar.

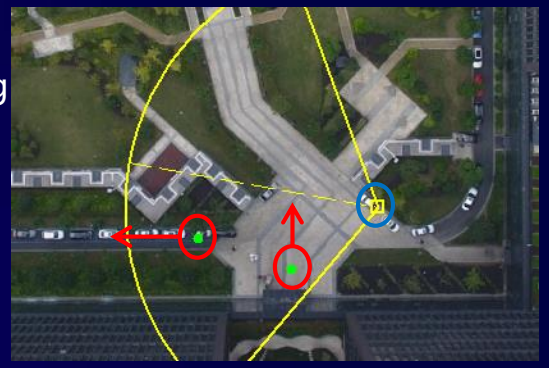

If the map has been configured on the platform, skip step 1 and 2 and enter the radar height.

Configuration

Step 6: Radar calibration

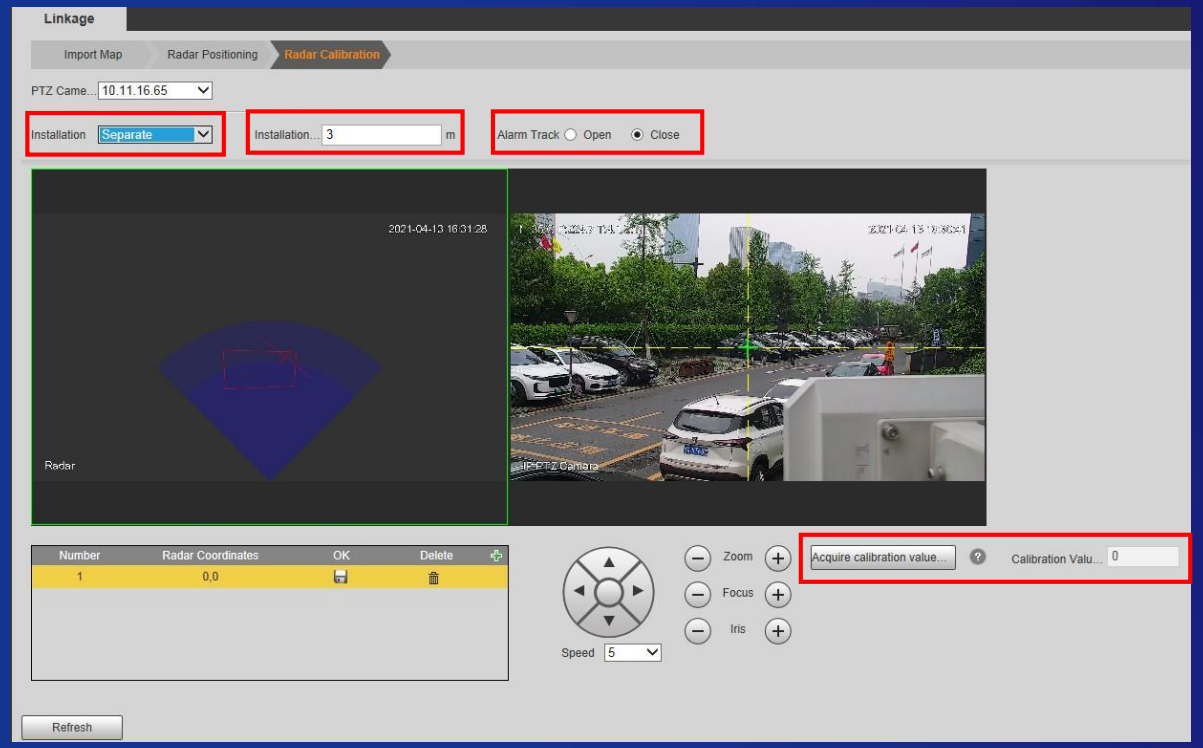

1. Select installation method

1.1. **Integrated installation**: When the PTZ camera and radar are installed on the same pole or position, only one set of radar coordinates is required (multiple sets of coordinates are also acceptable).

1.2. **Separated installation**: When the PTZ camera and radar are installed in different positions, two or more sets of coordinates are required.

2. Enter the PTZ installation height.

3. When **Alarm Track** is enabled, the PTZ camera can follow the target in the monitoring area after the radar is positioned.

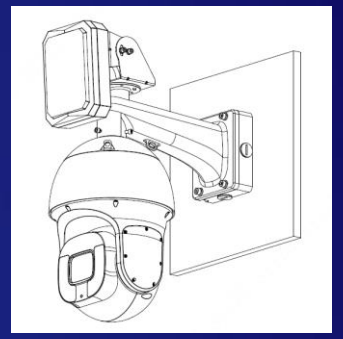

Integrated installation
PFB414W

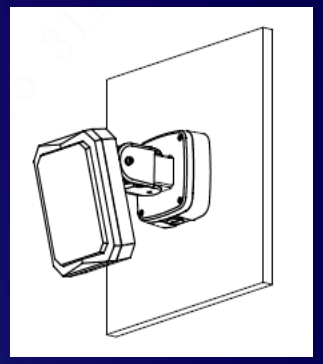

Separate installation
PFB510W

Configuration

Step 6: Radar calibration

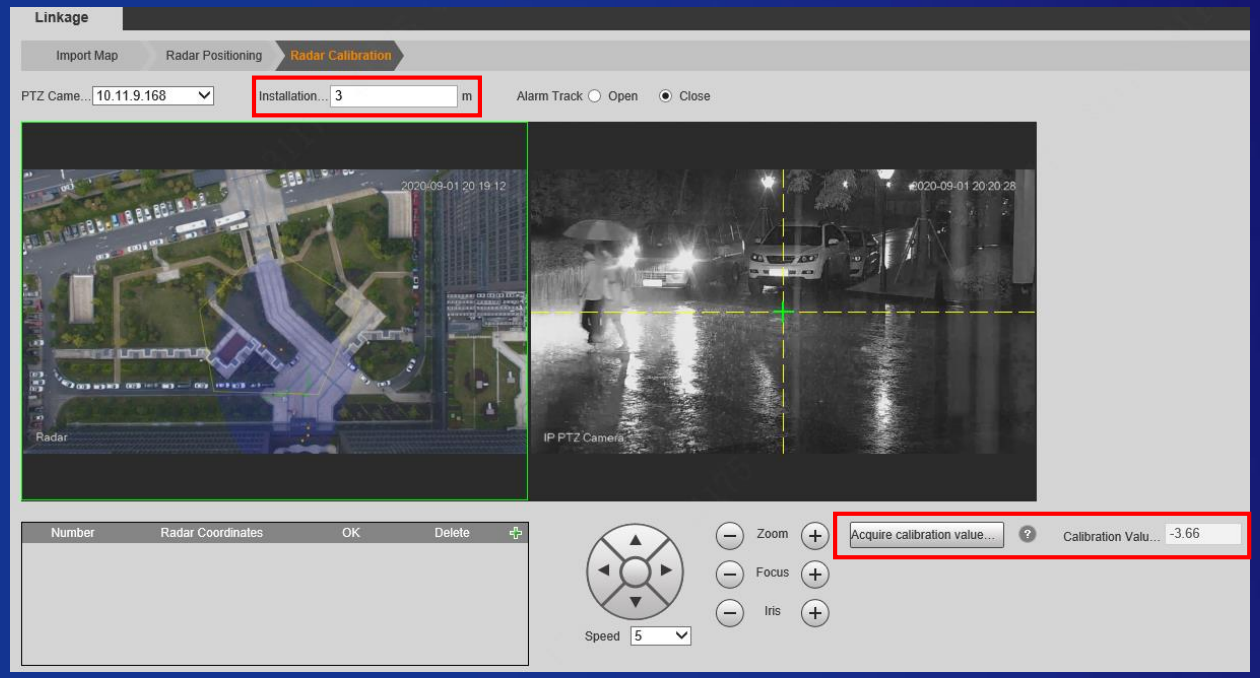

4. Adjust the live image to the maximum, and aim the green cross at the same height of the lens. Then click **Acquire calibration value**.

Note: The calibration value is between –2 to 2.

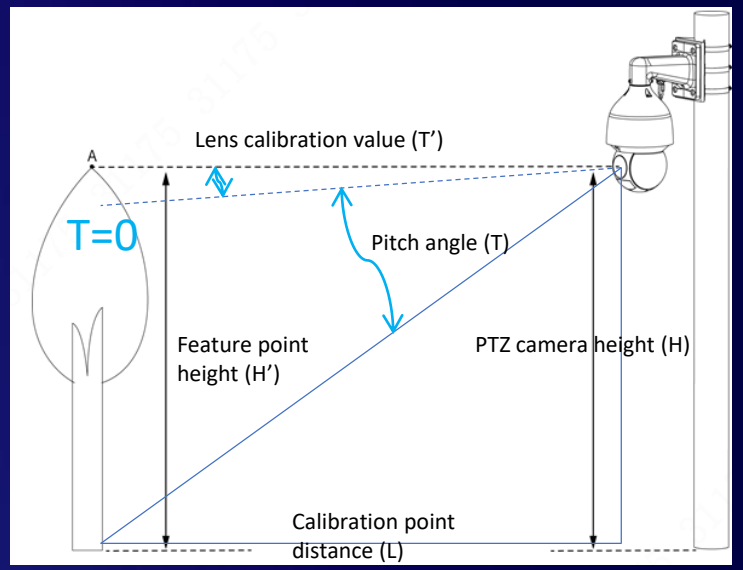

Calibration point

Principle of the calibration value:

1. **Due to factory or installing factors, the lens of PTZ camera may not be in a horizontal position when T=0. After calibrating, T' is obtained.**
2. **In the calibration, the distance L between the calibration point and the PTZ camera is calculated according to T and the height (H) of the PTZ camera.**
   According to trigonometric function, L=H÷tan(T+T')
3. **According to the distance between the two calibration points, the radar and the PTZ camera, complete the calibration of the radar and PTZ camera.**

Influences of the calibration value:
The absence of or incorrect calibration value may result in inaccurate tracking of the PTZ camera, and the target may be off to the top or bottom of the view.

Configuration

Step 7: Radar calibration (integrated installation)

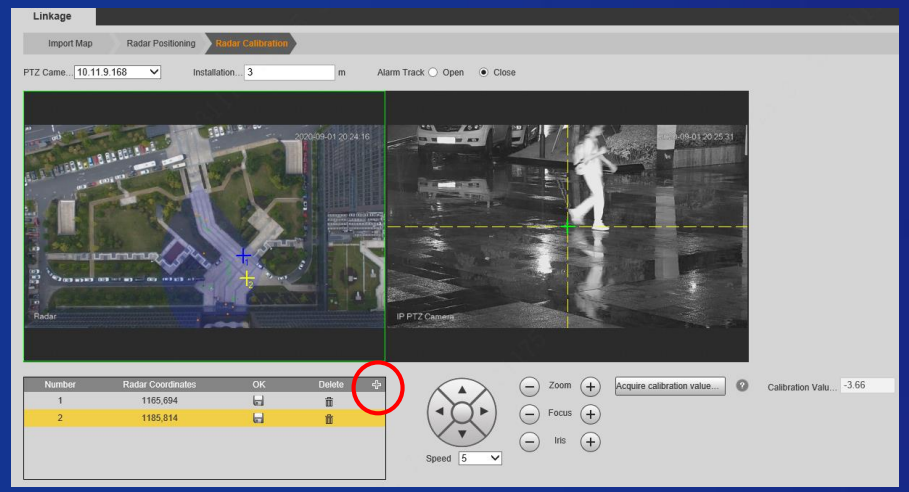

Tracking point calibration (Recommended)

Advantage: The calibration effect is not related to the map configuration

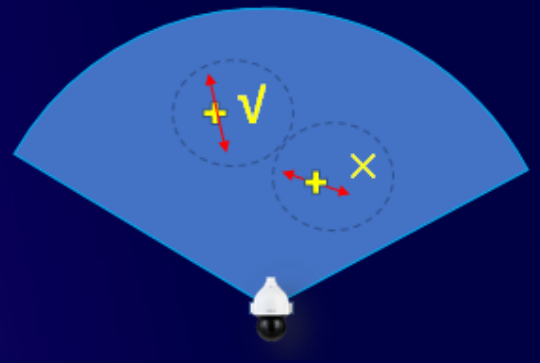

Preparations: Person A is on the spot, and Person B is configuring on the PC Client. A and B need to stay in contact.

1. Click "+" to add a new set of coordinates. Double-click on the map to display the map in full screen.
2. A keeps walking on the spot until a track (green) is formed. The track disappears and then changes to a static tracking point (orange).
3. Move the yellow cross to coincide with the center of the static tracking point, then double-click the screen to exit.
4. Aim the cross to the feet of A and adjust the PTZ camera image to make sure the target takes up 1/2 of the image.
5. Repeat step 1 to 4 to add the second set of coordinates.

Calibration point selection:

1. **Walk back and forth in the radial direction of the radar to form track points, avoiding the track points formed laterally**
2. **If the point is in the detection range, it should be within 20–50 m of the PTZ camera.**
3. **The target as a whole is in the center of the PTZ camera image (not the position of the feet)**

Note: If you need to adjust the position and orientation of the radar when the calibration is completed and the tracking effect is good, you only need to repeat step 1 to 5 (no need for another calibration if you did not click Save in step 6 and 7).

Configuration

Step 7: Radar calibration (separate installation)

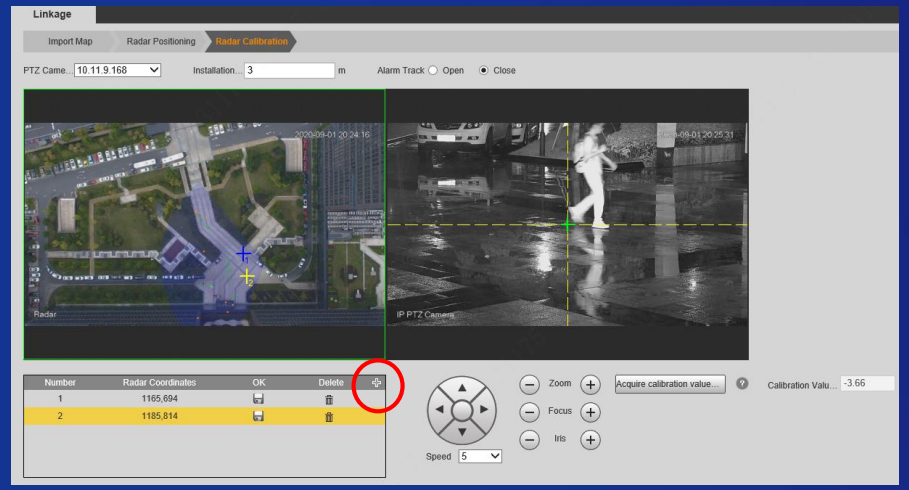

Tracking point calibration (Recommended)

Advantage: The calibration effect is not related to the map configuration

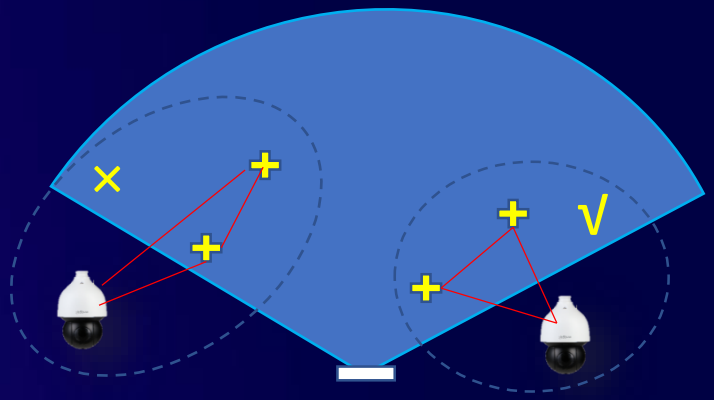

Preparations: Person A is on the spot, and Person B is configuring on the PC Client. A and B need to stay in contact.

1. Click "+" to add a new calibration point. Double-click on the map to display the map in full screen.
2. A keeps walking on the spot until a track (green) is formed. The track disappears and then changes to a static tracking point (orange).
3. Move the yellow cross to coincide with the center of the static tracking point, then double-click the screen to exit.
4. Move the monitoring area of the PTZ camera to the position of A. Align the center to the feet of the person when the cross is in the center of the screen, click **Save.**
5. Repeat step 1 to 4 to add the second calibration point.

Calibration point selection:

1. If the point is in the detection range, it should be within 10–20 m of the PTZ camera.

2. The PTZ camera and other two points shall not be placed on an approximate straight line.

3. The image center of the PTZ camera shall be aligned with the feet of the target.

Note: If you need to adjust the position and orientation of the radar when the calibration is completed and the tracking effect is good, you only need to repeat step 1 to 5 (no need for another calibration if you did not click Save in step 6 and 7).

Configuration

Step 8: Area management

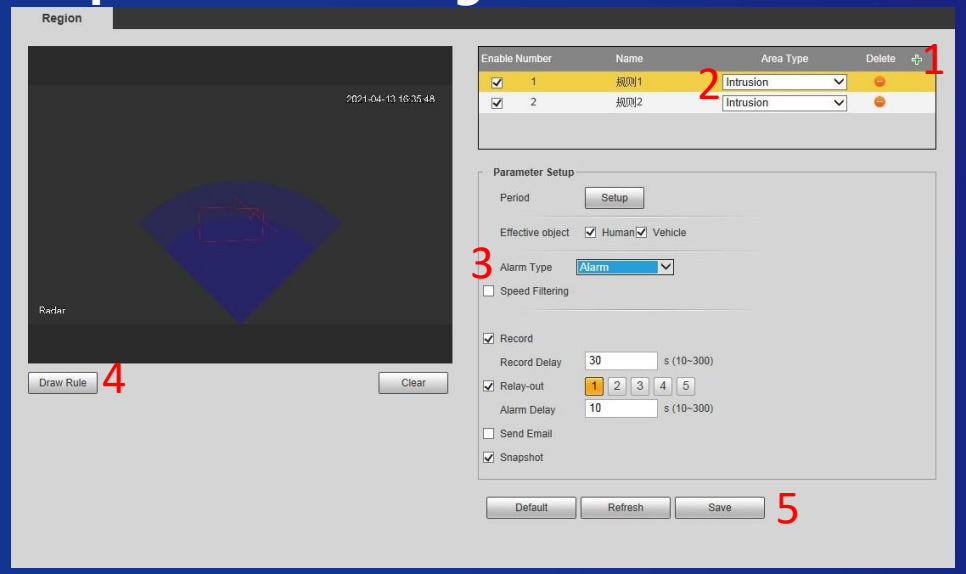

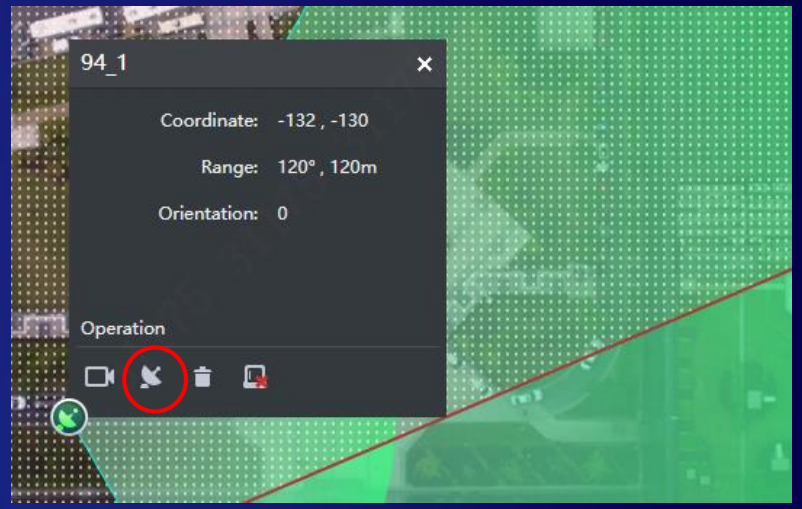

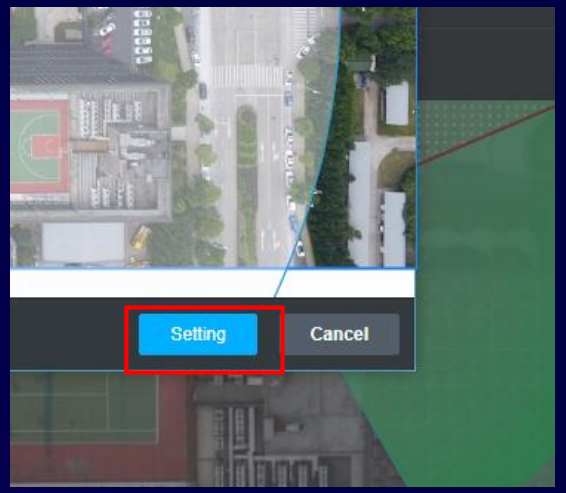

1. Click "+" to add rule →Select area type→Select alarm type→Draw rule →Click **Save**.
2. Supports two types of rules: Intrusion and tripwire.
3. Draw shield areas to avoid false alarms which caused by interferences.
4. Alarm priority: Alarm > Pre-Warning > Shield. The target track in the shield area is not displayed.
5. Effective objects are all selected by default. If not selected, such target will be filtered out without track.
6. Speed filtering only triggers alarm to the target within the speed range, and the target track outside the speed range is displayed normally.

Note:

1. Select the check box to enable the rule so that the radar can perform an alarm.
2. When synchronizing DSS client with area configuration, you need to click Setting and click **Confirm** to close it.

Q&A

- **Q1: Radar calibration failed**

1. The calibration value of PTZ camera is inaccurate or has not been obtained. Generally, the value is between –2 to 0.
2. Improper radar calibration point. The triangle formed between the camera and two points is invalid. The PTZ camera and the other two points shall not be placed in an straight line.

- **Q2: The camera cannot track the target or rotate**

1. Check if the track is displayed on the map. If not, problem may occur in the radar.
2. Check the PTZ camera management interface to see if the smart tracking is enabled.
3. Some programs in PTZ cameras do not support the Radar+PTZ smart tracking. Check the model and program version.

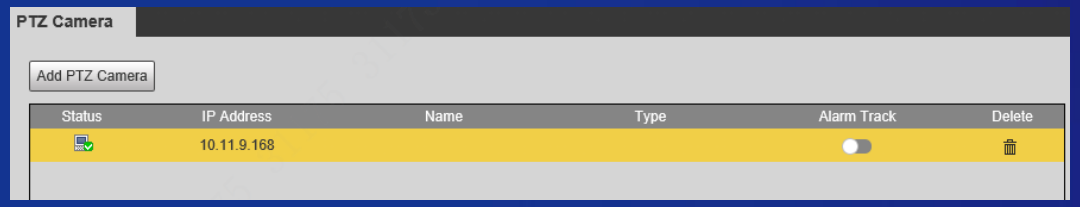

4. On the area management interface, check whether Region Filter is correctly configured (check "Person", all people will not be tracked and there is no track displayed).

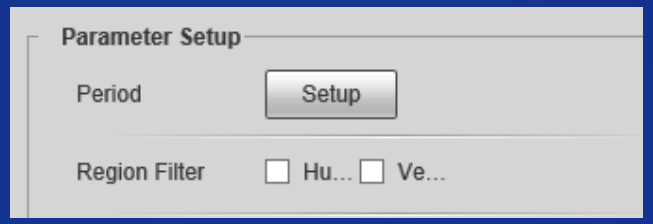

Q&A

- **Q3: The PTZ moves disorderly**

1. Bug occurs in the PTZ program. You need to upgrade the program to the version released after September 2019. Check the model and program version.

- **Q4: The camera cannot track targets accurately (tracking point calibration)**

1. Check the heights of the PTZ camera and the radar to see if there is a big gap between the number and the actual heights.
2. The camera calibration value is inaccurate or has not been obtained.
3. After calibration, if you change the map or adjust the position of the radar, you need to reselect the calibration point.

- **Q5: The camera cannot keep up with the moving target**

1. The target is too close to the camera. Even when the target moves normally, it exceeds the maximum rotation speed of the camera. It is recommended to keep a distance between the camera and the detection range of the radar.
2. When the target moves fast, the camera might fail to track it at first, but the target can be kept up during the continuous tracking later on. It is a normal phenomenon.
3. The screen ratio of the PTZ camera is inappropriate. It is recommended to set the "Tracking target display" to a smaller size.
4. In the case of longer distances, considering the accuracy of radar detection and calibration errors, you are recommended to adjust the Tracking Target Display to below 3 to ensure the tracking effect.

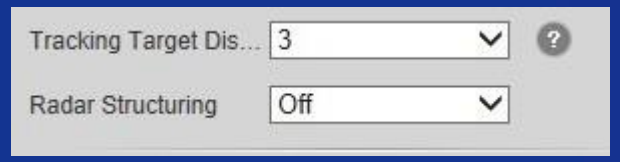

「 让社会更安全 让生活更智能 」

ENABLING A SAFER SOCIETY AND SMARTER LIVING