Analog Dome

HCD-6080R

1080p Analog HD IR Dome Camera

Key Features

- Full HD resolution
- 0.11 Lux@F1.6 (Color), 0 Lux (B/W : IR LED on)
- 3.2 ~ 10mm (3.1x) motorized V/F lens
- Day & Night (ICR), WDR (120dB)
- SSNRIV, Motion detection
- IR viewable length 20m
- Transmission distance max.500m
- Easy Installation (Plug & play), Dual power

Compatible Accessories (Optional)

SBP-122HM

SBP-122HM

SBD-120GP

SHD-3000F2

SBP-120WM

SBP-120WM

SHD-1198FW

SPB-IND6

SBP-390WM2

SBP-300WM

SBP-300WM

SBP-300WM1

SBP-300WM1

SBP-300PM

SBP-300PM

SBP-300LM

SBP-300CM

SBP-300NB

SBP-300CM

SBP-300NB

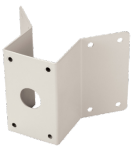
SBP-300KM

Design and specifications are subject to change without notice. The latest product information / specification can be found at hanwha-security.com

ⓒ Hanwha Techwin Co., Ltd. All rights reserved. 07-2019

HCD-6080R

1080p Analog HD IR Dome Camera

Specifications

Video

Imaging Device	1/2.8" 2MP CMOS
Resolution	1920x1080
Max. Framerate	30fps / 25fps(60Hz / 50Hz)
Min. Illumination	Color: 0.11Lux(F1.6)(30IRE) BW: 0Lux(IR LED on)
Video Out	BNC(AHD / TVI / CVI / CVBS Selectable)
Video Transmission Distance	500m(5C2V Coaxial Cable)

Lens

Focal Length (Zoom Ratio)	3.2~10mm(3.1x) motorized varifocal
Max. Aperture Ratio	F1.6
Angular Field of View	H: 110.2°(Wide) ~ 32°(Tele) / V: 55.4°(Wide) ~ 18°(Tele) / D: 128.4°(Wide) ~ 36.6°(Tele)
Min. Object Distance	0.5m(1.64ft)
Focus Control	Manual
Lens Type	DC auto iris

Pan / Tilt / Rotate

Pan / Tilt / Rotate Range	0° ~ 350° / 0° ~ 67° / 0° ~ 355°

Operational

Camera Title	Displayed up to 15 characters
Day & Night	Auto(ICR)
Backlight Compensation	BLC, HLC, WDR
Wide Dynamic Range	120dB
Digital Noise Reduction	SSNRIV
Defog	Support
Motion Detection	4ea
Privacy Masking	8ea, rectangular zones
Gain Control	Low / Middle / High / Very High
White Balance	ATW / AWC / Manual / Indoor / Outdoor
Electronic Shutter Speed	1 ~ 1/12,000sec
Video Rotation	H-Rev / V-Rev
Analytics	Motion detection
Alarm I/O	MD output 1ea
Alarm Triggers	Analytics
Alarm Events	Alarm output
IR Viewable Length	20m(65.62ft)
Coaxial Protocol	ACP(AHD Coax Protocol), TCP(TVI Coax Protocol), CCP(CVI Coax Protocol) CVBS: Pelco-C(Coaxitron)

Environmental & Electrical

Operating Temperature / Humidity	-10°C ~ +55°C(+14°F ~ +131°F) / Less than 90% RH
Input Voltage	24VAC, 12VDC

Design and specifications are subject to change without notice. The latest product information / specification can be found at hanwha-security.com
ⓒ Hanwha Techwin Co., Ltd. All rights reserved. 07-2019

Power Consumption	Max 5.8W

Mechanical

Color / Material	Ivory / Plastic
Product Dimensions / Weight	Ø119.8x98.5mm(4.72x3.88"), 330g(0.73 lb)

Design and specifications are subject to change without notice. The latest product information / specification can be found at hanwha-security.com
ⓒ Hanwha Techwin Co., Ltd. All rights reserved. 07-2019

HCD-6080R

1080p Analog HD IR Dome Camera

CAD

Unit: mm [inch]

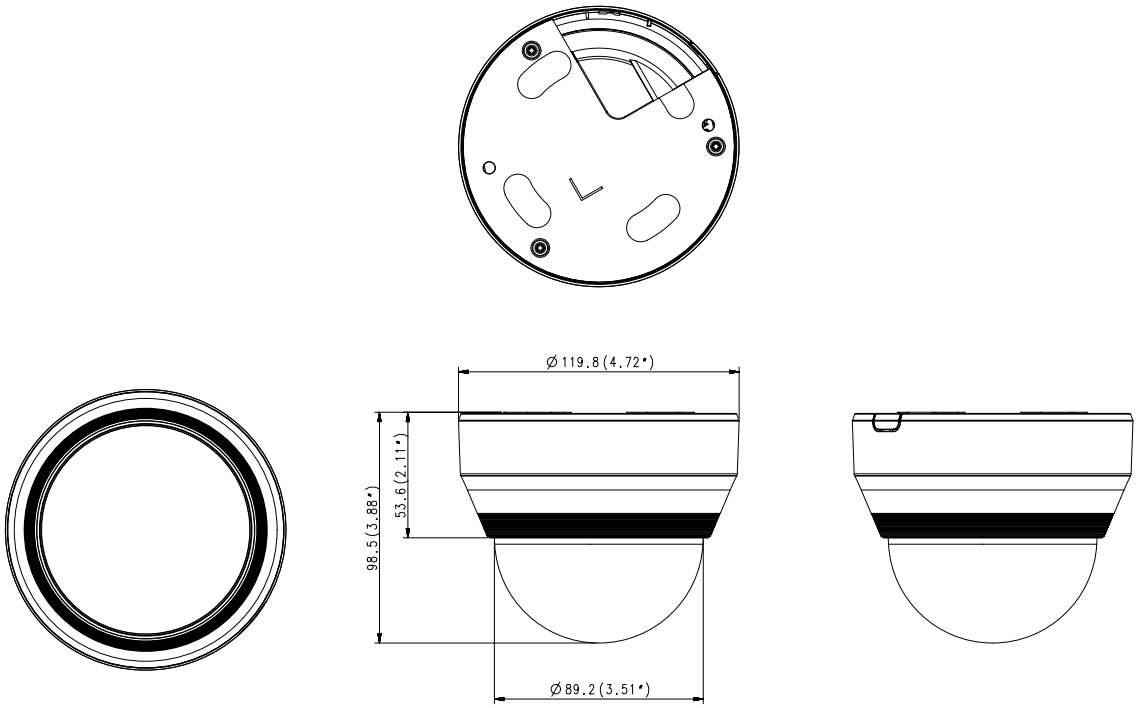

Design and specifications are subject to change without notice. The latest product information / specification can be found at hanwha-security.com
ⓒ Hanwha Techwin Co., Ltd. All rights reserved. 07-2019