Analog PTZ

HCP-6320HA

1080p Analog HD 32x PTZ Dome Camera

Key Features

- Full HD (1920 x 1080, 30fps) resolution
- 0.2Lux@F1.6, B/W : 0.01Lux@F1.6
- Powerful 32x zoom (4.44 ~ 142.6mm), Digital 16x
- Day & Night (ICR), Defog, WDR (120dB), SSNRIII
- Preset 700°/sec, Azimuth
- IP66 / IK10 (HCP-6320HA), IK10 (HCP-6320A + SHP-3701H only)
- RS-485, Coax control

Compatible Accessories (Optional)

SBP-300B

SBP-300CM

SBP-300KM

SBP-300LM

SBP-300NB

SBP-300PM

SBP-300WM

SBP-300WM1

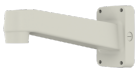

SBP-390WM2

SPB-PTZ7

Design and specifications are subject to change without notice. The latest product information / specification can be found at HanwhaVision.com.
Hanwha Vision is formerly known as Hanwha Techwin.

© Hanwha Vision CO., LTD. All rights reserved.

HCP-6320HA

1080p Analog HD 32x PTZ Dome Camera

Specifications

Video	
Imaging Device	1/2.8" 2.38MP CMOS
Resolution	1920x1080
Min. Illumination	Color: 0.3 Lux (1/30sec, F1.6, 50IRE) , 0.005 Lux(2sec, F1.6, 50IRE) B/W: 0.03 Lux (1/30sec, F1.6, 50IRE), 0.0005 Lux(2sec, F1.6, 50IRE) Color: 0.2 Lux (1/30sec, F1.6, 30IRE), 0.003 Lux(2sec, F1.6, 30IRE) B/W: 0.01 Lux (1/30sec, F1.6, 30IRE), 0.0001 Lux(2sec, F1.6, 30IRE)
Video Out	BNC(AHD), CVBS(SD, DIP connector type)

Lens	
Focal Length (Zoom Ratio)	4.44 ~ 142.6mm(32x) motorized varifocal
Optical Zoom	32x
Max. Aperture Ratio	F1.6(Wide) ~ F4.4(Tele)
Min. Object Distance	Wide 1.4m(4.59ft), Tele 1.9m(6.23ft)
Focus Control	Auto / Manual / One push
Lens Type	DC Auto Iris

Pan / Tilt / Rotate	
Pan Range	360° Endless
Pan Speed	Preset: 700°/sec, Manual: 0.024°/sec ~200°/sec
Tilt Range	210°(-15° ~195°)
Tilt Speed	Preset : 700°/sec, Manual : 0.024°/sec ~200°/sec
Preset Accuracy	±0.2°

Operational	
Camera Title	Displayed up to 12 characters
Day & Night	Auto(ICR)
Backlight Compensation	BLC, HLC, WDR
Wide Dynamic Range	120dB
Digital Noise Reduction	SSNRIII
Digital Image Stabilization	Support
Defog	Support
Motion Detection	1ea, rectangular zone
Privacy Masking	12ea, rectangular zones
Gain Control	Low / Middle / High
White Balance	ATW / AWC / Manual / Indoor / Outdoor
Electronic Shutter Speed	ESC / Auto / Manual
Video Rotation	Digital Flip
Analytics	Motion detection, Appear/Disappear, Enter/Exit, Virtual Line

Design and specifications are subject to change without notice. The latest product information / specification can be found at HanwhaVision.com.
Hanwha Vision is formerly known as Hanwha Techwin.

© Hanwha Vision CO., LTD. All rights reserved.

Serial Interface	RS-485: Samsung-T/E, Pelco-D/P, Panasonic, Bosch, AD, GE, Vicon, Honeywell
Alarm I/O	Input 4ea, Output 2ea
Alarm Triggers	Analytics
Alarm Events	Alarm output
Coaxial Protocol	ACP(AHD Coax Protocol), CVBS : Pelco-C(Coaxitron)

Environmental & Electrical	
Operating Temperature / Humidity	-50°C ~ +55°C(-58°F ~ +131°F) / Less than 90% RH
Storage Temperature / Humidity	-50°C ~ +60°C (-58°F ~ +140°F) / Less than 90% RH
Certification	IP66, IK10
Input Voltage	24VAC
Power Consumption	Max 24W(Heater Off), 65W(Heater On)

Mechanical	
Color / Material	Ivory / Plastic
Product Dimensions / Weight	Ø223.4x293.6mm(8.79x11.56"), 3300g(7.28 lb)

Design and specifications are subject to change without notice. The latest product information / specification can be found at HanwhaVision.com.
Hanwha Vision is formerly known as Hanwha Techwin.

© Hanwha Vision CO., LTD. All rights reserved.

HCP-6320HA

1080p Analog HD 32x PTZ Dome Camera

CAD

Unit:mm [inch]

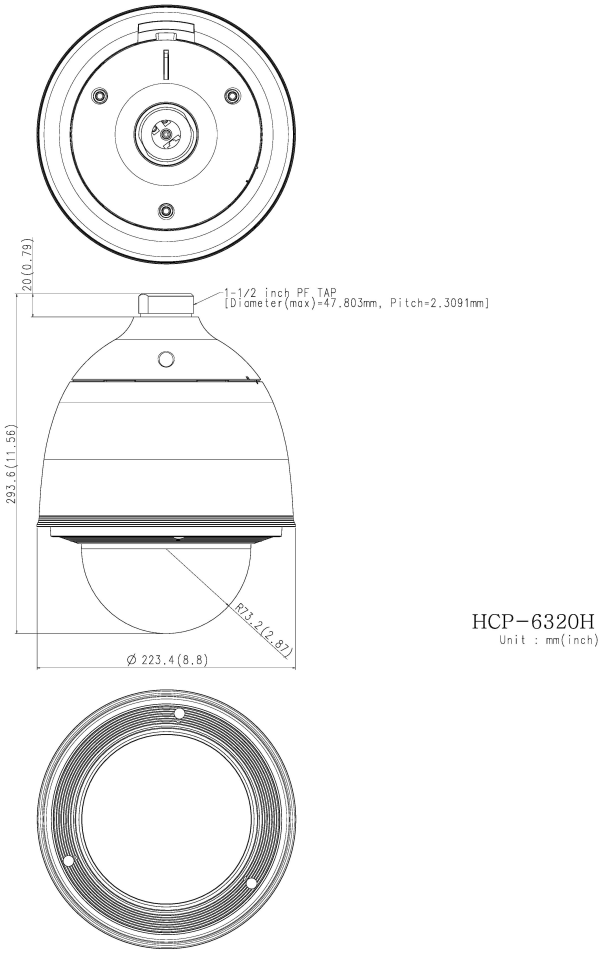

Design and specifications are subject to change without notice. The latest product information / specification can be found at HanwhaVision.com.
Hanwha Vision is formerly known as Hanwha Techwin.

© Hanwha Vision CO., LTD. All rights reserved.