Analog Dome

HCV-7020RA

QHD (4MP) Analog Vandal-Resistant IR Dome Camera

Key Features

- QHD (2560 x 1440, 30fps) resolution
- 0.27 Lux@F2.0 (Color) (HCV-7020R/7030R),0 Lux (B/W : IR LED on)
- Built-in 4.0mm fixed lens (HCV-7020R)
- Day & Night (ICR), DWDR, Motion detection
- IR Viewable Length 25m(7020R)
- Transmission distance max.500m
- Easy installation (Plug & play), IP66, IK10

Compatible Accessories (Optional)

SBP-122HM

SBP-137WM1

SPB-VAN12

SBV-120WC

SBP-390WM2

SBP-300WM1

SBP-300WM

SBP-300PM

SBP-300KM

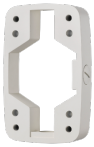
SBP-300B

SBP-300LM

SBP-300NB

SBP-300CM

Design and specifications are subject to change without notice. The latest product information / specification can be found at hanwha-security.com

ⓒ Hanwha Techwin Co., Ltd. All rights reserved. 07-2019

HCV-7020RA

QHD (4MP) Analog Vandal-Resistant IR Dome Camera

Specifications

Video

Imaging Device	1/3" 4MP CMOS
Resolution	2560x1440
Max. Framerate	30fps@4M(N), 25fps@4M(P)
Min. Illumination	Color: 0.27Lux(F2.0, 1/30sec) BW: 0Lux(IR LED on)
Video Out	BNC(AHD), additional CVBS for installation(2Pin connector type)
Video Transmission Distance	500m(5C2V Coaxial Cable)

Lens

Focal Length (Zoom Ratio)	4.0mm fixed
Max. Aperture Ratio	F2.0
Angular Field of View	H: 78.22°, V: 41.21°, D: 87.91°
Min. Object Distance	0.5m(1.64ft)

Pan / Tilt / Rotate

Pan / Tilt / Rotate Range	0°~350° / 0°~67° / 0°~355°

Operational

Day & Night	Auto(ICR)
Backlight Compensation	UserBLC, HLC, DWDR
Digital Noise Reduction	2DDNR
Motion Detection	4 zones
Privacy Masking	2 zones
Gain Control	Low / Middle / High / Very High
White Balance	ATW / AWC / Manual / Indoor / Outdoor
Electronic Shutter Speed	1/30 ~ 1/12,000sec(N), 1/25~ 1/12,000sec(P)
Video Rotation	H-Rev/V-Rev
Analytics	Motion detection
IR Viewable Length	25m(82.02ft)
Coaxial Protocol	ACP(AHD Coax Protocol), CVBS: Pelco-C(Coaxitron)

Environmental & Electrical

Operating Temperature / Humidity	-30°C ~ +55°C (-22°F ~ +131°F) / Less than 90% RH * Start up should be done at above -10°C
Certification	IP66, IK10
Input Voltage	12VDC
Power Consumption	Max 5W

Mechanical

Color / Material	Ivory / Aluminum
Product Dimensions / Weight	Ø120.3 x 91.7mm(Ø4.74”x3.61”), 510g(1.12 lb)

Design and specifications are subject to change without notice. The latest product information / specification can be found at hanwha-security.com
ⓒ Hanwha Techwin Co., Ltd. All rights reserved. 07-2019

HCV-7020RA

QHD (4MP) Analog Vandal-Resistant IR Dome Camera

CAD

Unit: mm [inch]

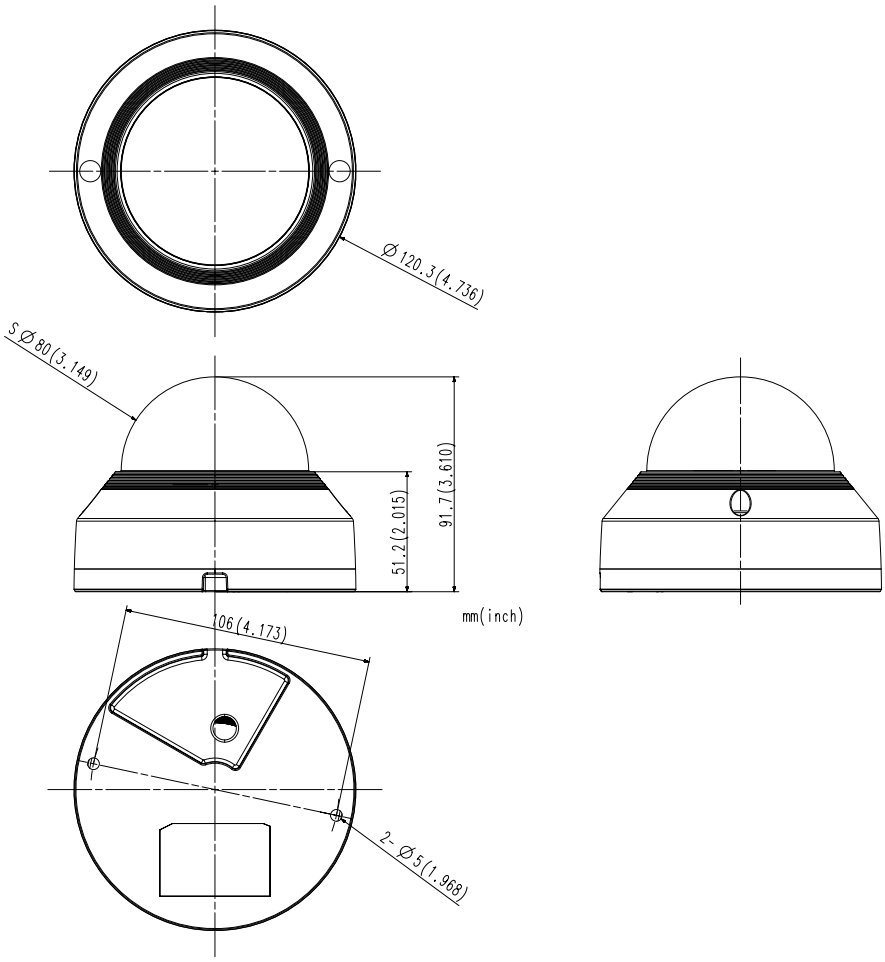

Design and specifications are subject to change without notice. The latest product information / specification can be found at hanwha-security.com

ⓒ Hanwha Techwin Co., Ltd. All rights reserved. 07-2019