SBV-136BW

Back Box

Key Features

- Color : White
- Material : Aluminum
- Weight : 345g
- Operation Temp. : -50°C~60°C
- Operation Hum. : 0~100%

Design and specifications are subject to change without notice. The latest product information / specification can be found at HanwhaVision.com.
Hanwha Vision is formerly known as Hanwha Techwin.

© Hanwha Vision CO., LTD. All rights reserved.

SBV-136BW

Back Box

Specifications

Mechanical	
Color	White
Material	Aluminum
RAL code	RAL9003
Product dimensions / weight	Ø136x40mm (Ø5.35x1.57") / 345g(0.76 lb)
Conduit hole	19.1mm(3/4") (M25)
Supported products	QNV-6072R/6082R, QNV-7082R, QNV-8080R ※ For further compatible models, please visit our website or use Toolbox

Design and specifications are subject to change without notice. The latest product information / specification can be found at HanwhaVision.com.
Hanwha Vision is formerly known as Hanwha Techwin.

© Hanwha Vision CO., LTD. All rights reserved.

SBV-136BW

Back Box

CAD

Unit:mm [inch]

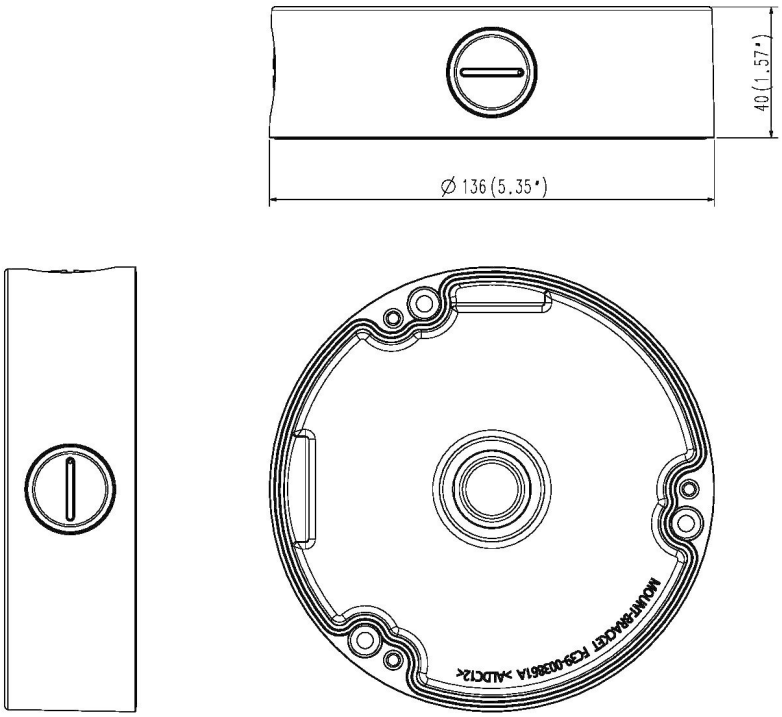

Design and specifications are subject to change without notice. The latest product information / specification can be found at HanwhaVision.com.
Hanwha Vision is formerly known as Hanwha Techwin.

© Hanwha Vision CO., LTD. All rights reserved.