Network Bullet

XNO-8082R

6MP IR Bullet Camera

Key Features

- 6MP resolution
- 2.8~8.4mm(3x) motorized varifocal
- 0.05Lux@F1.2 (Color), 0Lux (B/W, IR LED on)
- Max.30fps@6MP (H.265/H.264)
- IR viewable length 40m
- Day & Night (ICR), extreme WDR (120dB)
- DIS with built-in Gyro sensor
- Video Analytics(Defocus, Directional detection, Audio detection, Shock detection, Face/Upper body detection)
- Dual SD slots (Max. 1TB)
- PoE support
- IP66/IP67, IK10, NEMA4X

Compatible Devices

SBP-302PM

Design and specifications are subject to change without notice. The latest product information / specification can be found at HanwhaVision.com.
Hanwha Vision is formerly known as Hanwha Techwin.

© Hanwha Vision CO., LTD. All rights reserved.

XNO-8082R

6MP IR Bullet Camera

Specifications

Video	
Imaging Device	1/2.8" CMOS
Resolution	3328x1872, 3072x1728, 2592x1944, 2688x1520, 1920x1080, 1600x1200, 1280x1024, 1280x960, 1280x720, 1024x768, 800x600, 800x448, 720x576, 720x480, 640x480, 640x360, 320x240
Max. Framerate	H.265/H.264: Max. 30fps/25fps(60Hz/50Hz) MJPEG: Max. 30fps(@6MP Max. 5fps)
Min. Illumination	Color: 0.05Lux(F1.2, 1/30sec, 30IRE) BW: 0.005Lux(F1.2, 1/30sec, 30IRE), 0Lux(IR LED on)
Video Out	CVBS: 1.0 Vp-p / 75Ω composite, 720x480(N), 720x576(P) for installation USB: Micro USB Type B, 1280x720 for installation

Lens	
Focal Length (Zoom Ratio)	2.8~8.4mm(3x) motorized varifocal
Max. Aperture Ratio	F1.2(Wide)~F2.8(Tele)
Angular Field of View	H: 114°(Wide)~40°(Tele) V: 62°(Wide)~22°(Tele) D: 133°(Wide)~46°(Tele)
Min. Object Distance	0.7m(2.23ft)
Focus Control	Simple focus
Lens Type	DC Auto Iris, P iris

Pan / Tilt / Rotate	
Pan / Tilt / Rotate Range	0°~360° / 0°~100° / 0°~360°

Operational	
Camera Title	Displayed up to 85 characters
Day & Night	Auto(ICR)
Backlight Compensation	BLC, HLC, WDR, SSDR
Wide Dynamic Range	extremeWDR(120dB)
Digital Noise Reduction	SSNR V
Digital Image Stabilization	Support(built-in gyro sensor)
Defog	Support
Motion Detection	8ea, 8point Polygonal zones
Privacy Masking	32ea, 4point Quadrangle zones - Color: Gray/Green/Red/Blue/Black/White - Mosaic
Gain Control	Off / Max gain / Manual
White Balance	ATW / NarrowATW / AWC / Manual / Indoor / Outdoor
LDC	Support(Fill/stretch mode)
Electronic Shutter Speed	Minimum / Maximum / Anti flicker(2~1/12,000sec) Prefer shutter control
Digital PTZ	Support(Preset, Group)

Design and specifications are subject to change without notice. The latest product information / specification can be found at HanwhaVision.com.
Hanwha Vision is formerly known as Hanwha Techwin.

© Hanwha Vision CO., LTD. All rights reserved.

Video Rotation	Flip, Mirror, Hallway view(90°/270°)
Analytics	Analytics events - Defocus detection, Directional detection, Motion detection, Digital auto tracking, Appear/Disappear, Enter/Exit, Loitering, Tampering, Fog detection, Virtual line, Audio detection, Sound classification, Shock detection, Face/upper body detection
Business Intelligence	People counting, Queue management, Heatmap
Alarm I/O	2 configurable I/O ports
Alarm Triggers	Analytics, Network disconnect, Alarm input, App event, Time schedule, MQTT subscription
Alarm Events	When alarm trigger occurred - File upload(image): e-mail/FTP/SFTP - File upload(video clip): FTP/SFTP - Notification: e-mail - Recording: SD/SDHC/SDXC or NAS recording at event triggers - Alarm output - Handover: PTZ preset, send message by HTTP/HTTPS/TCP - Audio clip playback - MQTT: publication
Audio In	Selectable(mic in/line in)
Audio Out	Line out
IR Viewable Length	WiseIR 40m(131.23ft)

Network	
Ethernet	Metal shielded RJ-45(10/100/1000BASE-T)
Video Compression	H.265/H.264: Main/Baseline/High, MJPEG
Audio Compression	G.711 u-law /G.726 Selectable G.726(ADPCM) 8KHz, G.711 8KHz G.726: 16Kbps, 24Kbps, 32Kbps, 40Kbps AAC-LC: 48Kbps at 16KHz
Smart Codec	Manual(5ea area), WiseStream II
Video Quality Adjustment	H.264/H.265: Target bitrate level control MJPEG: Target bitrate level control
Bitrate Control	H.264/H.265: CBR or VBR MJPEG: VBR
Streaming	Unicast(20 users) / Multicast Multiple streaming(Up to 10 profiles, 3 virtual channel support)
Protocol	IPv4, IPv6, TCP/IP, UDP/IP, RTP(UDP), RTP(TCP), RTCP, RTSP, NTP, HTTP, HTTPS, SSL/TLS, DHCP, FTP/SFTP, SMTP, ICMP, IGMP, SNMPv1/v2c/v3(MIB-2), ARP, DNS, DDNS, QoS, UPnP, Bonjour, LLDP, CDP, SRTP(TCP, UDP Unicast), MQTT
Application Programming Interface	ONVIF Profile S/G/T SUNAPI(HTTP API) Hanwha Vision open platform

Security	
OS / Firmware Protect	Encrypted Firmware, Secure boot, Signed Firmware
User authentication	Digest Authenticaton, Prevent brute-force attacks
Network authentication	IEEE 802.1X(EAP-TLS, EAP-LEAP, EAP-PEAP, MSCHAPv2)
Secure Communication	HTTPS, WSS(WebSocket Secure), SRTP
Access Control	IP-based access control
Data Protect	Encryption Credentials, Encrypt compress for live recording file export
Audit	Access / System / Event Log management
Device ID	Device certificate(Hanwha Vision Root CA)
Secure Storage	HTPM(Hanwha trusted platform module), SDcard partition encrypt

General	
Webpage Language	English, Korean, Chinese, French, Italian, Spanish, German, Japanese, Russian, Portuguese, Czech, Polish, Turkish, Dutch, Hungarian, Greek
Edge Storage	Micro SD/SDHC/SDXC 2slot Max. 1TB(512GBx2)

Design and specifications are subject to change without notice. The latest product information / specification can be found at HanwhaVision.com.
Hanwha Vision is formerly known as Hanwha Techwin.

© Hanwha Vision CO., LTD. All rights reserved.

Edge Storage(OnCloud)	Micro SD/SDHC/SDXC 2slot Max. 2TB(1TBx2) * Hanwha Vision branded microSD cards have been certified and recommended for OnCloud edge recording.
Memory	4GB RAM, 512MB Flash

Environmental & Electrical	
Operating Temperature / Humidity	-50°C~+60°C(-58°F~+140°F) / 0~95% RH(non-condensing) * Start up should be done at above -30°C
Storage Temperature / Humidity	-50°C~+60°C(-58°F~+140°F) / 0~90% RH
EPA(Effective Projected Area)	0.03㎡
Certification	IP66/IP67, NEMA4X, IK10
Input Voltage	PoE(IEEE802.3af, class3), 12VDC, 24VAC
Power Consumption	PoE: Max 12.95W, typical 10.5W 12VDC: Max 12.5W, typical 9.4W 24VAC: Max 14.5W, typical 11.2W Power redundancy failover

Mechanical	
Color / Material	Dark grey / Aluminum Window: Hard-coated window
Product Dimensions / Weight	ø91x368.6mm(ø3.85x14.51"), 2200g(4.85 lb)
Compatible Conduit hole / Gangbox	19.1mm(3/4")(M25) single, double, 4" octagon, 4" square
Backbox	Included
Pole Mount	SBP-302PM

Certifications & Standards	
EMC	FCC 47 CFR 15 Subpart B Class A ICES-3(A)/NMB-3(A) CE/UKCA - EN 55032 Class A, EN 50130-4, EN 61000-3-2, EN 61000-3-3 VCCI CISPR 32 Class A RCM AS/NZS CISPR 32 Class A KS C 9832 Class A , KS C 9835
Safety	UL 60950-1, CAN/CSA C22.2 NO. 60950-1 IEC/EN 62471
Environment	IEC/EN 63000 IEC/EN 60529 IP66/IP67, IEC/EN 62262 IK10 NEMA 250 type 4X

DORI (EN62676-4 standard)	
Detect (25PPM/ 8PPF)	Wide: 43.2m(141.81ft) / Tele: 182.9m(599.97ft)
Observe (63PPM/ 19PPF)	Wide: 17.3m(56.73ft) / Tele: 73.1m(239.99ft)
Recognize (125PPM/ 38PPF)	Wide: 8.6m(28.36ft) / Tele: 36.6m(119.99ft)
Identify (250PPM/ 76PPF)	Wide: 4.3m(14.18ft) / Tele: 18.3m(60.00ft)

Design and specifications are subject to change without notice. The latest product information / specification can be found at HanwhaVision.com.
Hanwha Vision is formerly known as Hanwha Techwin.

© Hanwha Vision CO., LTD. All rights reserved.

XNO-8082R

6MP IR Bullet Camera

CAD

Unit:mm [inch]

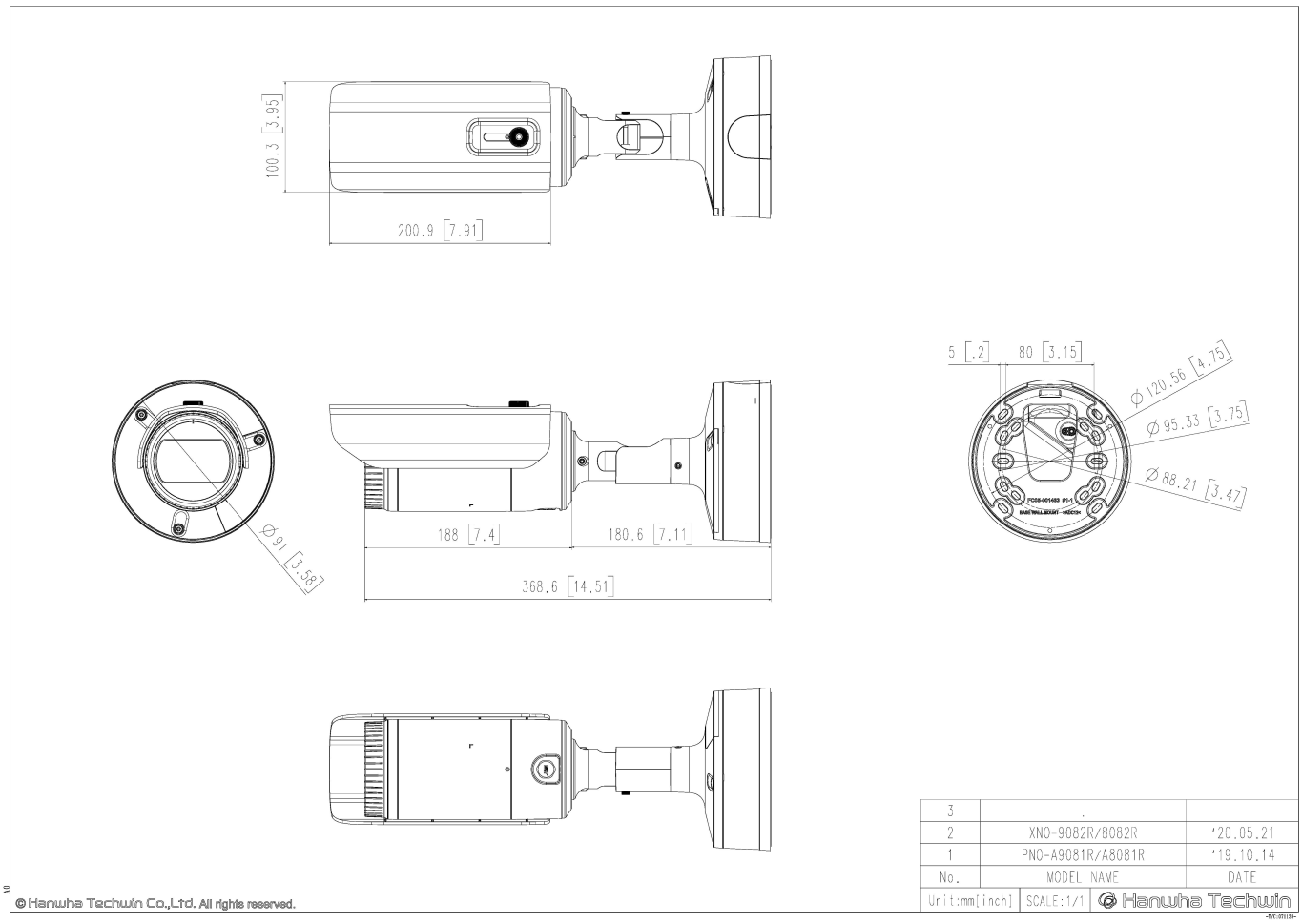

Design and specifications are subject to change without notice. The latest product information / specification can be found at HanwhaVision.com.
Hanwha Vision is formerly known as Hanwha Techwin.

© Hanwha Vision CO., LTD. All rights reserved.